ACCESS SERVICE

REGULATIONS, RATES AND CHARGES

Applying to the provision of Access Services for
Connection to Intrastate Communications Facilities
for customers within the operating
territory of:

Windstream Nebraska, Inc.
Windstream of the Midwest, Inc.

RECEIVED
JUL 27 2006
NEBRASKA PUBLIC SERVICE
COMMISSION

4001 Rodney Parham Road
Little Rock, AR 72212

ACCESS SERVICE

SHEET NO	REVISION
CHECK LIST	
1	**Fifth***
2	First
3	Original
4	Original
5	First
6	Original
TABLE OF CONTENTS	
1	Original
2	Original
3	Original
4	Original
5	Original
6	Original
7	Original
8	Original
9	Original
10	Original
11	Original
12	Original
13	First
14	Original
15	Original
GENERAL	
1	Original
2	Original
3	Original
4	Original
5	Original
6	Original
7	Original
8	Original
9	Original
10	Original
11	Original
SECTION 1	
1	Original
SECTION 2	
1	Original
2	Original
3	Original
4	Original
5	Original
6	Original
7	Original
8	Original
9	Original
10	Original
11	Original
12	Original
13	Original

SHEET NO	REVISION
SECTION 2 (Cont'd)	
14	Original
15	Original
16	Original
17	Original
18	Original
19	Original
20	Original
21	Original
22	Original
23	Original
24	Original
25	Original
26	Original
27	Original
28	Original
29	Original
30	Original
31	Original
32	Original
33	Original
34	Original
35	Original
36	Original
37	Original
38	Original
39	Original
39.1	Original
39.2	Original
39.3	Original
40	Original
41	Original
42	Original
43	Original
44	**First***
45	Original
46	First
47	Original
48	Original
49	Original
50	Original
51	Original
52	Original
53	Original
54	Original
55	Original
56	Original
57	Original
58	Original
59	Original
60	Original
61	Original
62	Original

Received
FEB - 6 2018
NPSC Comm. Dept.

ACCESS SERVICE

SHEET NO	REVISION
SECTION 2 (Cont'd)	
63	Original
64	Original
65	Original
66	Original
67	Original
68	Original
69	**First**
70	Original
71	Original
72	Original
73	Original
74	Original
75	Original
76	Original
77	Original
78	Original
79	Original
80	Original
81	Original
82	Original
83	Original
84	Original
85	Original
86	Original
87	**First**
88	Original
89	Original
SECTION 3	
1	Original
2	Original
3	Original
4	Original
5	Original
6	Original
SECTION 4	
1	Original
SECTION 5	
1	Original
2	Original
3	Original
4	Original
5	Original
6	Original

SHEET NO	REVISION
SECTION 5 (Cont'd)	
7	Original
8	Original
9	Original
10	Original
11	Original
12	Original
13	Original
14	Original
15	Original
16	Original
17	Original
18	Original
19	Original
20	Original
21	Original
22	Original
23	Original
24	Original
SECTION 6	
1	Original
2	Original
3	Original
4	Original
5	Original
6	Original
7	Original
8	Original
9	Original
10	Original
11	Original
12	Original
13	Original
14	Original
15	Original
16	Original
17	Original
18	Original
19	Original
20	Original
21	Original
22	Original
23	Original
24	Original
25	Original
26	Original
27	Original
28	Original

RECEIVED
DEC 20 2011
NPSC-Comm. Dept.

ACCESS SERVICE

SHEET NO	REVISION	SHEET NO	REVISION
SECTION 6 (Cont'd)		SECTION 6 (Cont'd)	
29	Original	78	Original
30	Original	79	Original
31	Original	80	Original
32	Original	81	Original
33	Original	82	Original
34	Original	83	Original
35	Original	84	Original
36	Original	85	Original
37	Original	86	Original
38	Original	87	Original
39	Original	88	Original
40	Original	89	Original
41	Original	90	Original
42	Original	91	Original
43	Original	92	Original
44	Original	93	Original
45	Original	94	Original
46	Original	95	Original
47	Original	96	Original
48	Original	97	Original
49	Original	98	Original
50	Original	99	Original
51	Original	100	Original
52	Original	10	Original
53	Original	102	Original
54	Original	103	Original
55	Original	104	Original
56	Original	105	Original
57	Original	106	Original
58	Original	107	Original
59	Original	108	Original
60	Original	109	Original
61	Original	110	Original
62	Original	111	Original
63	Original	112	Original
64	Original	113	Original
65	Original	114	Original
66	Original	115	Original
67	Original	116	Original
68	Original	117	Original
69	Original	118	Original
70	Original	119	Original
71	Original	120	Original
72	Original	121	Original
73	Original	122	Original
74	Original	123	Original
75	Original	124	Original
76	Original	125	Original
77	Original	126	Original

ACCESS SERVICE

SHEET NO	REVISION
SECTION 6 (Cont'd)	
127	Original
128	Original
129	Original
130	**First** *
130.1	**Original** *
131	**First** *
132	**First** *
133	**First** *
134	**First** *
135	**First** *
136	Original
137	Original
138	Original
139	Original
140	Original
141	Original
142	Original
143	Original
144	Original
145	**First** *
146	Original
147	Original
148	Original
149	Original
150	Original
151	Original
152	Original
153	Original
154	Original
155	Original
156	Original
SECTION 7	
1	Original
2	Original
3	Original
4	Original
5	Original
6	Original
7	Original
8	Original
9	Original
10	Original
11	Original
12	Original
13	Original
14	Original
15	Original
16	Original

SHEET NO	REVISION
SECTION 7 (Cont'd)	
17	Original
18	Original
19	Original
20	Original
21	Original
22	Original
23	Original
24	Original
25	Original
26	Original
27	Original
28	Original
29	Original
30	Original
31	Original
32	Original
33	Original
34	Original
35	Original
36	Original
37	Original
38	Original
39	Original
40	Original
41	Original
42	Original
43	Original
44	Original
45	Original
46	Original
47	Original
48	Original
49	Original
50	Original
51	Original
52	Original
53	Original
54	Original
55	Original
56	Original
57	Original
58	Original
59	Original
60	Original
61	Original
62	Original
63	Original
64	Original
65	Original

ACCESS SERVICE

SHEET NO	REVISION
SECTION 7 (Cont'd)	
66	Original
67	Original
68	Original
69	Original
70	Original
71	Original
72	Original
73	Original
74	Original
75	Original
76	Original
77	Original
78	Original
79	Original
80	Original
81	Original
82	Original
83	Original
84	Original
85	Original
86	Original
87	Original
88	Original
89	Original
90	Original
91	Original
92	Original
93	Original
94	Original
95	Original
96	Original
97	Original
SECTION 8	
1	Original
SECTION 9	
1	Original
SECTION 10	
1	Original
2	Original
3	Original

SHEET NO	REVISION
SECTION 10 (Cont'd)	
4	Original
5	Original
6	Original
7	Original
8	Original
9	Original
10	Original
SECTION 11	
1	Original
2	Original
3	Original
4	Original
SECTION 12	
1	Original
SECTION 13	
1	Original
2	Original
3	Original
4	Original
5	Original
6	Original
7	Original
8	Original
9	Original
10	Original
11	Original
12	Original
13	Original
14	Original
15	Original
16	Original
17	Original
18	Original
19	Original
20	Original
21	Original
22	Original
23	Original
24	Original
25	Original
26	Original

ACCESS SERVICE

SHEET NO	REVISION
SECTION 13 (Cont'd)	
27	Original
28	Original
29	Original
30	Original
31	Original
SECTION 14	
1	Original
SECTION 15	
1	Original
2	Original
3	Original
4	Original
5	Original
6	Original
7	Original
8	Original
9	Original
10	Original
11	Original
12	Original
13	Original
14	Original
15	Original
16	Original
17	Original
18	Original
19	Original
20	Original
21	Original
22	Original
23	Original
24	Original
25	Original
26	Original
27	Original
28	Original
29	Original
30	Original
31	Original
32	Original
33	Original
34	Original

SHEET NO	REVISION
SECTION 15 (Cont'd)	
35	Original
36	Original
37	Original
38	Original
39	Original

ACCESS SERVICE

TABLE OF CONTENTS

	Page No.
	Title 1
CHECK SHEET	1
TARIFF INFORMATION AND USE	1
CONCURRING CARRIERS	6
CONNECTING CARRIERS	6
OTHER PARTICIPATING CARRIERS	6
REGISTERED SERVICE MARKS REGISTERED TRADEMARKS	6
EXPLANATION OF SYMBOLS	7
EXPLANATION OF ABBREVIATIONS	7
REFERENCE TO OTHER TARIFFS	9
REFERENCE TO TECHNICAL PUBLICATIONS	9
1. APPLICATION OF TARIFF	1
2. GENERAL REGULATIONS	1
2.1 Undertaking of the Telephone Company	1
2.1.1 Scope	1
2.1.2 Limitations	1
2.1.3 Liability	3
2.1.4 Provision of Services	6
2.1.5 Installation and Termination of Services Other Than Interconnection	6
2.1.6 Maintenance of Services	9
2.1.7 Changes and Substitutions	10
2.1.8 Refusal and Discontinuance of Service	11
2.1.9 Limitation of Use of Metallic Facilities	13
2.1.10 Notification of Service-Affecting Activities	13
2.1.11 Coordination with Respect to Network Contingencies	13
2.1.12 Provision and Ownership of Telephone Numbers	13
2.1.13 Preemption of Service	14
2.2 Use	14
2.2.1 Interference or Impairment	14
2.2.2 Unlawful and Abusive Use	15

ACCESS SERVICE

TABLE OF CONTENTS (Cont'd)

		Page No.
2. GENERAL REGULATIONS (Cont'd)		
2.3	Obligations of the Customer	17
2.3.1	Damages	17
2.3.2	Ownership of Facilities and Theft	17
2.3.3	Equipment Space and Power	17
2.3.4	Availability for Testing	18
2.3.5	Balance	18
2.3.6	Design of Customer Services	18
2.3.7	References to the Telephone Company	19
2.3.8	Claims and Demands for Damages	19
2.3.9	Coordination with Respect to Network Contingencies	21
2.3.10	Jurisdictional Report Requirements	21
2.3.11	Determination of Interstate Charges for Mixed Interstate and Intrastate Access Service	39
2.4	Payment Arrangements and Credit Allowances	40
2.4.1	Payment of Rates, Charges and Deposits	40
2.4.2	Minimum Periods	47
2.4.3	Cancellation of an Order for Service	48
2.4.4	Credit Allowance for Service Interruptions	48
2.4.5	Re-establishment of Service Following Fire, Flood or Other Occurrence	56
2.4.6	Title or Ownership Rights	57
2.4.7	Access Service Provided by More Than One Telephone Company	57
2.5	Connections	62
2.5.1	General	62

ACCESS SERVICE

TABLE OF CONTENTS (Cont'd)

Page No.

2. GENERAL REGULATIONS (Cont'd)

2.6 Definitions 63

Access Code 63
Access Minutes 63
Access Tandem 63
Alternate Tandem Switching Provider (ATSP) 63
Answer/Disconnect Supervision 63
Attenuation Distortion 64
Balance (100 Type) Test Line 64
Billing Name and Address 64
Bit 64
Business Day 65
Busy Hour Minutes of Capacity (BHMC) 65
Call 65
Carrier Identification Code (CIC) 65
Carrier or Common Carrier 66
CCS 66
Central Office 66
Central Office Equipment Technician 66
Central Office Prefix 66
Centralized Automatic Reporting on Trunks Testing 67
Channel(s) 67
Channel Service Unit 67
Channelize 67
Clear Channel Capability 67
C-Message Noise 67
C-Notched Noise 68
Coin Station 68
Common Channel Signaling 68
Common Line 69
Communications System 69
Customer(s) 69
Customer Designated Premises 69

ACCESS SERVICE

TABLE OF CONTENTS (Cont'd)

Page No.

2. GENERAL REGULATIONS (Cont'd)

2.6 Definitions (Cont'd)

Customer Message 70
Customer of Record 70
DACS 70
Data Transmission (107 Type) Test Line 70
Decibel 70
Decibel Reference Noise C-Message Weighting 71
Decibel Reference Noise C-Message Referenced to 0 71
Density Pricing Zone 71
Detail Billing 71
Digital End Office 71
Digital Hub 71
Digital Switched 56 Service 71
Direct-Trunked Transport 71
DS0 71
DS0-A 72
DS0-B 72
Dual Tone Multifrequency Address Signaling 72
Echo Control 72
Echo Path Loss 72
Echo Return Loss 72
Effective 2-Wire 73
Effective 4-Wire 73
8XX 73
End Office Switch 74
End User103
Entrance Facilities 74
Entry Switch 74
Envelope Delay Distortion 75
Equal Level Echo Path Loss 75
Exchange104
Exit Message 75
Expected Measured Loss 75
Extended Area Service 75
Field Identifier 76
First Point of Switching 76
Frequency Shift 76
Grandfathered 76
Host Central Office 76
Host Office 76
Hub Location 77

ACCESS SERVICE

TABLE OF CONTENTS (Cont'd)

Page No.

2. GENERAL REGULATIONS (Cont'd)

2.6 Definitions (Cont'd)

Hunt Group Arrangement 77
Immediately Available Funds 77
Impedance Balance 77
Impulse Noise 78
Individual Case Basis 78
Initial Address Message 78
Inserted Connection Loss 78
Installation and Repair Technician 78
Interexchange Carrier (IC) or Interexchange Common Carrier 78
Intermodulation Distortion 79
Interstate Communications 79
Intrastate Communications 79
Line Side Connection 80
Local Access and Transport Area 80
Local Calling Area 80
Local Tandem Switch 80
Loop Around Test Line 80
Loss Deviation 81
Message 81
Milliwatt (102 Type) Test Line 81
Multifrequency (MF) Address Signaling 81
Multiplexing 81
Multipoint Service 81
National Security Emergency Preparedness (NSEP) Service 82
Network Control Signaling 82
Nonsynchronous Test Line 82
North American Numbering Plan 82
NSEP Treatment 82

ACCESS SERVICE

TABLE OF CONTENTS (Cont'd)

Page No.

2. GENERAL REGULATIONS (Cont'd)

2.6 Definitions (Cont'd)

Off-hook 83
On-hook 83
Open Circuit Test Line 83
Originating Direction 83
OZZ Digits 83
Pay Telephone 83
Phase Jitter 83
Point of Termination 83
Premises113
Query 84
Rate Zone 84
Registered Equipment 84
Release Message 84
Remote Switching Modules 84
Return Loss 84
Secondary Channel 84
Service Access Code (SAC) 85
Service Switching Point (SSP) 85
Serving Wire Center 85
Seven Digit Manual Test Line 85
Shortage of Facilities or Equipment 85
Short Circuit Test Line 85
Signal-To-C-Notched Noise Ratio 85
Signaling Point (SP) 86
Signaling System 7 (SS7) 86
Signal Transfer Point (STP) 86
Signal Transfer Point (STP) Port 86
Singing Return Loss 86
Subrate Multiplexing 87
Subtending End Office of an Access Tandem 87
Synchronous Test Line 87
Tandem-Switched Transport 87
Telecommunications Service Priority (TSP) System 87
Terminating Direction 87
Transmission Measuring (105 Type) Test Line/Responder 87
Transmission Path 88
Trunk 88
Trunk Group 88
Trunk Side Connection 88
Two-Wire to Four-Wire Conversion 89

ACCESS SERVICE

TABLE OF CONTENTS (Cont'd)

		Page No.
2.	GENERAL REGULATIONS (Cont'd)	
2.6	Definitions (Cont'd)	
	Uniform Service Order Code	89
	V and H Coordinates Method	89
	WATS Serving Office	89
	Wire Center	89
3.	ACCESS CHARGE RESIDUAL RATES AND CHARGES	1
3.1	General Description	1
3.2	Limitations	1
3.3	Undertaking of the Telephone Company	1
3.4	Obligations of the Customer	2
3.5	Payment Arrangements	3
3.6	Rate Regulations	3
3.7	Rates and Charges	6
4.	RESERVED FOR FUTURE USE	1

ACCESS SERVICE

TABLE OF CONTENTS (Cont'd)

		Page No.
5.	ORDERING OPTIONS FOR SWITCHED AND SPECIAL ACCESS SERVICE	1
5.1	General	1
5.1.1	Ordering Conditions	1
5.1.2	Provision of Other Services	3
5.1.3	Special Construction	4
5.2	Access Order	4
5.2.1	Access Order Service Date	8
5.2.2	Access Order Modifications	10
5.2.3	Cancellation of an Access Order	15
5.2.4	Selection of Facilities For Access Orders	20
5.2.5	Minimum Period	20
5.2.6	Minimum Period Charges	21
5.2.7	Shared Use Facilities	21
5.2.8	Access Orders for Services Provided by More Than One Exchange Telephone Company	22

ACCESS SERVICE

TABLE OF CONTENTS (Cont'd)

		Page No.
6.	SWITCHED ACCESS SERVICE	1
6.1	General	1
6.1.1	Feature Group Arrangements and Manner of Provision	2
6.1.2	Rate Categories	6
6.1.3	Special Facilities Routing	33
6.1.4	Design Layout Report	33
6.1.5	Testing	33
6.1.6	Ordering Options and Conditions	34
6.2	Provision and Description of Switched Access Service Feature Groups	35
6.2.1	Feature Group A	36
6.2.2	Feature Group B	41
6.2.3	Feature Group C	45
6.2.4	Feature Group D	53
6.3	Chargeable and Nonchargeable Optional Features	62
6.3.1	Common Switching Nonchargeable Optional Features	62
6.3.2	Transport Termination Nonchargeable Optional Features	73
6.3.3	Chargeable Optional Features	77
6.4	Transmission Specifications	85
6.5	Obligations of the Telephone Company	86
6.5.1	Network Management	86
6.5.2	Design and Traffic Routing of Switched Access Service	87
6.5.3	Provision of Service Performance Data	90
6.5.4	Trunk Group Measurement Reports	90
6.5.5	Determination of Number of Transmission Paths	91
6.5.6	Determination of Number of End Office Transport Terminations	91
6.5.7	Design Blocking Probability	92

ACCESS SERVICE

TABLE OF CONTENTS (Cont'd)

			Page No.
6.	SWITCHED ACCESS SERVICE (Cont'd)		
6.6	Obligations of the Customer		94
	6.6.1	Report Requirements	94
	6.6.2	Supervisory Signaling	94
	6.6.3	Trunk Group Measurement Reports	94
6.7	Rate Regulations		95
	6.7.1	Description and Application of Rates and Charges	95
	6.7.2	Minimum Periods	108
	6.7.3		109
	6.7.4		110
	6.7.5	Change of Feature Group Type	112
	6.7.6	Moves	112
	6.7.7	Measuring Access Minutes	113
	6.7.8	Network Blocking Charge for Feature Group D	124
	6.7.9	Application of Rates for Extension Service	125
	6.7.10	Message Unit Credit	125
	6.7.11	Local Information Delivery Services	125
	6.7.12	Mileage Measurement	126
	6.7.13	Shared Use	129
	6.7.14	Density Pricing Zones	129
6.8	Rates and Charges		130
	6.8.1	Local Transport	130
	6.8.2	End Office	145
	6.8.3	500 and 900 Access Service Translation Optional Feature	155
	6.8.4	8XX Data Base Access Service	155
	6.8.5	Billing Name and Address	156
	6.8.6	Operator Transfer Service	156
7.	SPECIAL ACCESS SERVICE		1
7.1	General 280		
	7.1.1	Channel Types	1

ACCESS SERVICE

TABLE OF CONTENTS (Cont'd)

		Page No.
7.	SPECIAL ACCESS SERVICE (Cont'd)	
7.1	General (Cont'd)	
7.1.2	Service Descriptions	4
7.1.3	Service Configurations	6
7.1.4	Alternate Use	10
7.1.5	Special Facilities Routing	10
7.1.6	Design Layout Report	10
7.1.7	Acceptance Testing	11
7.1.8	Ordering Options and Conditions	11
7.2	Rate Regulations	12
7.2.1	Rate Categories	12
7.2.2	Types of Rates and Charges	15
7.2.3	Moves	19
7.2.4	Minimum Periods	19
7.2.5	Mileage Measurement	20
7.2.6	Facility Hubs	21
7.2.7	Shared Use Analog and Digital High Capacity Services	23
7.2.8	High Capacity Optional Rate Plans	25
7.3	Surcharge For Special Access	34
7.3.1	General	34
7.3.2	Application	34
7.3.3	Exemption of Special Access Service	36
7.3.4	Rate Regulations	37
7.3.5	Rate	38
7.4	Message Station Equipment Recovery Charge	39
7.4.1	General	39
7.4.2	Rate	39
7.5	Metallic Service	40
7.5.1	Basic Channel Description	40
7.5.2	Technical Specifications Packages	40
7.5.3	Channel Interfaces	41
7.5.4	Optional Features and Functions	41
7.5.5	Rates and Charges	42

ACCESS SERVICE

TABLE OF CONTENTS (Cont'd)

		Page No.
7.6	Telegraph Grade Service	43
7.6.1	Basic Channel Description	43
7.6.2	Technical Specifications Packages	43
7.6.3	Channel Interfaces	43
7.6.4	Optional Features and Functions	43
7.6.5	Rates and Charges	44
7.7	Voice Grade Services	45
7.7.1	Basic Channel Description	45
7.7.2	Technical Specifications Package	45
7.7.3	Channel Interfaces	46
7.7.4	Optional Features and Functions	46
7.7.5	Rates and Charges	55
7.8	Video Service	61
7.8.1	Basic Channel Description	61
7.8.2	Technical Specifications Packages	61
7.8.3	Channel Interfaces	62
7.8.4	Rates and Charges	64
7.9	Digital Data Service	65
7.9.1	Basic Channel Description	65
7.9.2	Technical Specifications Packages	65
7.9.3	Channel Interfaces	65
7.9.4	Optional Features and Functions	66
7.9.5	Rates and Charges	68
7.10	High Capacity Service	70
7.10.1	Basic Channel Description	70
7.10.2	Technical Specifications Packages	71
7.10.3	Channel Interfaces	72
7.10.4	Optional Features and Functions	72
7.10.5	Rates and Charges - DS1	76
7.10.6	Rates and Charges - DS3	79
7.11	Individual Case Filings	97

ACCESS SERVICE

TABLE OF CONTENTS (Cont'd)

		Page No.
8.	RESERVED FOR FUTURE USE	1
9.	RESERVED FOR FUTURE USE	1
10.	SPECIAL FEDERAL GOVERNMENT ACCESS SERVICES	1
10.1	General	1
10.2	Emergency Conditions	1
10.3	Safeguarding of Service	3
10.3.1	Facility Availability	3
10.4	Federal Government Regulations	3
10.5	Service Offerings to the Federal Government	4
10.5.1	Type and Description	4
10.5.2	Mileage Application	7
10.5.3	Rates and Charges	8

ACCESS SERVICE

TABLE OF CONTENTS (Cont'd)

		Page No.
11.	SPECIAL FACILITIES ROUTING OF ACCESS SERVICES	1
11.1	Description of Special Facilities Routing of Access Services377	
11.1.1	Diversity	1
11.1.2	Avoidance	1
11.1.3	Cable-Only Facilities	1
11.2	Rates and Charges for Special Facilities Routing of Access Service	2
11.2.1	Diversity	2
11.2.2	Avoidance	2
11.2.3	Diversity and Avoidance Combined	3
11.2.4	Cable-Only Facilities	3
12.	SPECIALIZED SERVICE OR ARRANGEMENTS	1
12.1	General	1
12.2	Rates and Charges	1
13.	ADDITIONAL ENGINEERING, ADDITIONAL LABOR AND MISCELLANEOUS SERVICES	1
13.1	Additional Engineering	1
13.1.1	Charges for Additional Engineering	2
13.2	Additional Labor	3
13.2.1	Overtime Installation	3
13.2.2	Overtime Repair	3
13.2.3	Stand by	3
13.2.4	Testing and Maintenance with Other Telephone Companies	4
13.2.5	Other Labor	4
13.2.6	Charges for Additional Labor	4
13.3	Miscellaneous Services	7
13.3.1	Maintenance of Service	7
13.3.2	Restoration Priority	8
13.3.3	Presubscription	8
13.3.4	Testing Services	14
13.3.5	Miscellaneous Equipment	25
13.3.6	Telecommunications Service Priority System	26

ACCESS SERVICE

TABLE OF CONTENTS (Cont'd)

		Page No.
14.	EXCEPTIONS TO ACCESS SERVICE OFFERINGS	1
15.	INTERFACE GROUPS, TRANSMISSION SPECIFICATIONS AND CHANNEL INTERFACES	1
15.1	Local Transport Interface Groups	1
15.1.1	Interface Group 1	1
15.1.2	Interface Group 2	2
15.1.3	Interface Group 3	2
15.1.4	Interface Group 4	3
15.1.5	Interface Group 5	3
15.1	Local Transport Interface Groups (Cont'd)	
15.1.6	Interface Group 6	3
15.1.7	Interface Group 7	4
15.1.8	Interface Group 8	4
15.1.9	Interface Group 9	5
15.1.10	Interface Group 10	6
15.1.11	Available Premises Interface Codes	6
15.1.12	Supervisory Signaling	9
15.2	Transmission Specifications Switched Access Service	10
15.2.1	Standard Transmission Specifications	10
15.2.2	Data Transmission Parameters	16
15.3	Special Access Channel Interface Specifications and Network Channel Codes	19
15.3.1	Glossary of Channel Interface Codes and Options	19
15.3.2	Impedance	23
15.3.3	Digital Hierarchy Channel Interface Codes (4DS)	24
15.3.4	Service Designator/Network Channel Code Conversion Table	24
15.3.5	Compatible Channel Interfaces	26

ACCESS SERVICE

TARIFF INFORMATION AND USE

GENERAL

- This tariff contains rates and regulations applicable to Access Services.

Tariff Page Format

- Page Numbering. Page numbers are located in the upper right corner of each tariff page. Pages are numbered sequentially. When a new page must be added between existing pages, a decimal and number is added to the previous page number, to sequentially number the new page. For example a new page between existing pages 20 and 21 would be numbered 20.1. A new page added between pages 18.1 and 18.2 would be numbered 18.1.1.

- Page Revision Numbering. Page Revision Numbers are located in the upper right corner of each tariff page. This number is the most recent page revision on file with the NPSC. Due to Notice Periods, and changed Effective Dates, the most recent page on file with the NPSC may not be in effect. Consult the Effective Date on a specific page and Tariff Supplements to determine if that page is in effect (see Tariff Supplements following).

- Issue Date. The Issue Date in the lower left corner of each tariff page is the date that page was filed with the NPSC.

- Effective Date. The Effective Date in the lower right corner is the date the page is scheduled to go into effect (at 12:01 AM on that date). This date may be changed by either reissuing the page, or by issuing a tariff supplement to change the effective date without reissuing the page. A Tariff Supplement is usually used when many tariff pages are involved to avoid the necessity to reprint and reissue many pages solely to change the effective date.

ACCESS SERVICE

TARIFF INFORMATION AND USE (Cont'd)

GENERAL (Cont'd)

Tariff Section Numbering

- An alpha-numeric numbering plan is used to number tariff regulations and rates. Each level is subordinate to and dependent on its next higher level. An example of the numbering sequence follows:

6
6.2
6.2.1
6.2.1(B)
6.2.1(B)(2)
6.2.1(B)(2)(a)

Tariff Revision Coding

- Revisions to this tariff are coded through the use of symbols. These symbols appear in the right margin of the page. The symbols and their meanings are:

N - to signify new rate or regulation.
R - to signify reduction to a rate or charge.
I - to signify increase to a rate or charge.
D - to signify discontinued rate or regulation.
C - to signify changed regulation.
T - to signify a change in text but no change in rate or regulation.
S - to signify matter reissued without change.
M - to signify matter relocated without change.
Z - to signify a correction.

- Other marginal codes are used to direct the reader to a footnote for specific information. Codes used for this purpose are lower case letters of the alphabet, e.g., x, y and z. These codes may appear beside the page revision number or in the right margin opposite specific text.

ACCESS SERVICE

TARIFF INFORMATION AND USE (Cont'd)

TARIFF STRUCTURE AND ORGANIZATION

Tariff Supplements

- A Supplement may be filed with the NPSC to cancel or suspend a tariff, or under Special Authority, to change the effective date of tariff pages or tariff material without reissuing or refiling the affected tariff pages.

- A Supplement will briefly describe the action taken (e.g., suspension, deferral, effective date change, etc.) as well as indicate what tariff material, sections or pages are affected.

- The Supplements in effect are listed by number on the first Check Sheet, in the text at the top of that Check Sheet. When a Supplement is no longer needed, it will be deleted from the Check Sheet.

- It is recommended that Supplements be placed in the front of the tariff, preceding the Title Page.

Title Page (Page 1)

- Title Page 1 provides information regarding the class of service provided, the geographical application of the tariff, and the type of facilities used to provide service. This page also provides information related to the origination of the tariff.

Check Sheet (Page 1)

- When new or revised tariff pages are filed with the NPSC, revised and updated Check Sheets are also filed with the NPSC.

- The Check Sheets list all pages in the tariff as well as the most recent revision number of each page. When pages are changed, or added, the Check Sheets are changed to reflect the change or addition. An asterisk (*) is placed next to revised or added pages to highlight the pages changed.

- The Check Sheets list the most recent page revision filed with the NPSC. It does not indicate that the latest revision is effective. The effective date on the page itself and Tariff Supplements must be examined to determine page effectiveness.

ACCESS SERVICE

TARIFF INFORMATION AND USE (Cont'd)

TARIFF STRUCTURE AND ORGANIZATION (Cont'd)

Table of Contents (Pages 1 through 15)

- The Table of Contents lists the Sections and paragraphs of the Tariff and provides a page number at which that Section or paragraph begins.

Other Carriers (5)

- In addition to the Issuing Carrier, all Concurring Carriers are listed in the tariff.

Symbols and Abbreviations (Page 7 through 9)

- A listing and explanation of tariff coding symbols and abbreviations used in the tariff is provided.

Technical Publications (Pages 9 through 11)

- The status and availability of technical publications required for the provision of Access Service is provided.

Section 1 - Application of Tariff

- States the application and scope of the Access Service tariff.

Section 2 - General Regulations

- States the general regulations that apply to the access services offered by this tariff.

ACCESS SERVICE

TARIFF INFORMATION AND USE (Cont'd)

TARIFF STRUCTURE AND ORGANIZATION (Cont'd)

Section 3 - Access Charge Residual

Section 5 - Ordering Options

- States the rates and regulations for the Ordering Options available for the ordering of switched and special access services.

Section 6, 7, 10, 11, 12 and 13

- State the specific rates and regulations for the following Access Services:

  6 - Switched Access Service
  7 - Special Access Service
  10 - Special Federal Government Access Services
  11 - Special Federal Routing of Access Services
  12 - Specialized Service or Arrangements
  13 - Additional Engineering, Additional Labor and Miscellaneous Services

Section 14 - Exceptions to Access Service Offerings

- This section is provided to identify those Issuing Carriers who do not provide certain categories of Access Service offered by this tariff.

Section 15 - Technical Specifications

- Provides the technical specifications and service parameters of Access Services.

ACCESS SERVICE

CONCURRING CARRIERS

Windstream of the Midwest, Inc.

CONNECTING CARRIERS

NO CONNECTING CARRIERS

OTHER PARTICIPATING CARRIERS

NO OTHER PARTICIPATING CARRIERS

REGISTERED SERVICE MARKS	REGISTERED TRADEMARKS
NONE	NONE

ACCESS SERVICE

EXPLANATION OF SYMBOLS

(C) - To signify changed regulation
(D) - To signify discontinued rate or regulation
(I) - To signify increase
(M) - To signify matter relocated without change
(N) - To signify new rate or regulation
(R) - To signify reduction
(S) - To signify reissued matter
(T) - To signify a change in text but no change in rate or regulation
(Z) - To signify a correction

EXPLANATION OF ABBREVIATIONS

ac - Alternating current
AML - Actual Measured Loss
ANI - Automatic Number Identification
ATSP - Alternate Tandem Switching Provider
AT&T - American Telephone and Telegraph Company
BD - Business Day
BHMC - Busy Hour Minutes of Capacity
CAROT - Centralized Automatic Reporting on Trunks
CCS - Common Channel Signaling
CCSNC - Common Channel Signaling Network Connection
CI - Changes Interface
CIC - Carrier Identification Code
CNP - Charge Number Parameter
CO - Central Office
COCTX - Central Office Centrex
Cont'd - Continued
COR - Customer of Record
CPE - Customer Provided Equipment
CPN - Calling Party Number
CSP - Carrier Selection Parameter
Ctx - Centrex
dB - decibel
dBrnC - Decibel Reference Noise C-Message Weighting
dBrnCO - Decibel Reference Noise C-Message Weighted 0
dBv - Decibel(s) Relative to 1 Volt (Reference)
dBvl - Decibel(s) Relating to 1 Volt (Reference)
dc - direct current
DDD - Direct Distance Dialing
EDD - Envelope Delay Distortion
ELEPL - Equal Level Echo Path Loss
EML - Expected Measured Loss
EPL - Echo Path Loss
ERL - Echo Return Loss
ESS - Electronic Switching System
ESSX - Electronic Switching System Exchange
f - frequency

ACCESS SERVICE

EXPLANATION OF ABBREVIATIONS (Cont'd)

F.C.C.	-	Federal Communications Commission
FID	-	Field Identifier
HC	-	High Capacity
Hz	-	Hertz
IC	-	Interexchange Carrier
ICB	-	Individual Case Basis
ICL	-	Inserted Connection Loss
kbps	-	kilobits per second
kHz	-	kilohertz
LATA	-	Local Access and Transport Area
Ma	-	milliamperes
Mbps	-	Megabits per second
MF	-	Multifrequency Address Signaling
MHz	-	Megahertz
MMUC	-	Minimum Monthly Usage Charge
MRC	-	Monthly Recurring Charge
MT	-	Metalic
MTS	-	Message Telecommunications Service(s)
NPA	-	Numbering Plan Area
NRC	-	Nonrecurring Charge
NTS	-	Non-Traffic Sensitive
NXX	-	Three-Digit Central Office Code
OTPL	-	Zero Transmission Level Point
PBX	-	Private Branch Exchange
PCM	-	Pulse Code Modulation
PLR	-	Private Line Ringdown
POT	-	Point of Termination
rms	-	root-mean-square
RSM	-	Remote Switching Modules
RSS	-	Remote Switching Systems
SAC	-	Service Access Code
SNAL	-	Signaling Network Access Line
SP	-	Signaling Point
SPOI	-	Signaling Point of Interface
SRL	-	Singing Return Loss
SSN	-	Switched Service Network
SSP	-	Service Switching Point
SS7	-	Signaling System 7
STP	-	Signal Transfer Point
SWC	-	Serving Wire Center
TES	-	Telephone Exchange Service(s)
TG	-	Telegraph Grade
TLP	-	Transmission Level Point
TSPS	-	Traffic Service Position System
TV	-	Television
USOC	-	Uniform Service Order Code

ACCESS SERVICE

EXPLANATION OF ABBREVIATIONS (Cont'd)

VG	-	Voice Grade
V & H	-	Vertical & Horizontal
WATS	-	Wide Area Telecommunications Service(s)
WD	-	Wideband Digital

REFERENCE TO OTHER TARIFFS

Whenever reference is made in this tariff to other tariffs of the Telephone Company, the reference is to the tariffs in force as of the effective date of this tariff, and to amendments thereto and successive issues thereof.

The following tariffs are referenced in this tariff and may be obtained from the Federal Communications Commission's commercial contractor.

NATIONAL CARRIER ASSOCIATION, INC.
ACCESS SERVICE
TARIFF F.C.C. NO. 5

NATIONAL EXCHANGE CARRIER ASSOCIATION, INC.
WIRE CENTER AND INTERCONNECTION INFORMATION
TARIFF F.C.C. NO. 4

Windstream Nebraska, Inc.,
SPECIAL CONSTRUCTION
TARIFF F.C.C. NO. 3

REFERENCE TO TECHNICAL PUBLICATIONS

The following technical publications are referenced in this tariff and may be obtained from Bell Communications Research, Inc., Distribution Storage Center, 60 New England Ave., Piscataway, NJ 08854.

Technical Reference:

Bellcore Practice BR 010-200-010 CRIS Exchange Message Record
Issued: August 30, 1996

PUB 41004 Data Communications Using Voiceband Private Line Channels
Issued: August 30, 1996

ACCESS SERVICE

REFERENCE TO TECHNICAL PUBLICATIONS (Cont'd)

PUB 62310 Digital Data System Channel Interface Specification
Issued: August 30, 1996 Available: October, 1983

PUB 62411 High Capacity Digital Service Channel Interface Specification
Issued: September, 1983 Available: October, 1983

TR-NPL-000054 High Capacity Digital Service (1.544 Mbs) Interface Generic Requirements for End Users
Issued: April 1989

TR-NPL-000334 Voice Grade Switched Access Service
Issued: June, 1986

TR-NPL-000335 Voice Grade Special Access Service
Issued: June, 1986

TR-NPL-000336 Metallic and Telegraph Grade Special Access Service
Issued: October, 1987

TR-NPL-000337 Program Audio Special Access Service
Issued: July, 1987

TR-NPL-000338 Television Special Access Service
Issued: December, 1986

TR-NPL-000339 Wideband Analog Special Access Service
Issued: October, 1987

TR-NPL-000340 Wideband Digital Special Access Service
Issued: October, 1987

TR-NPL-000341 Digital Data Special Access Service
Issued: March, 1989

TA-TSY-000342 High Capacity Digital Special Access Service
Issued: June, 1986

TR-TSV-000905 Common Channel Signaling Network Interface Specification Supplement 1 Available: August 1989

ACCESS SERVICE

REFERENCE TO TECHNICAL PUBLICATIONS (Cont'd)

The following technical publication is referenced in this tariff and may be obtained from the Bell Communications Technical Education Center, Room B02, 6200 Route 53, Lisle, IL 60532.

Telecommunications Transmission Engineering
Volume 3 - Networks and Services (Chapter 6 and 7)
Second Edition, 1980
Issued: August 30, 1996 Available: June, 1980

The following Technical Publication is referenced in this tariff and may be obtained from the National Exchange Carrier Association, Inc., Director - Tariff and Regulatory Matters, 100 So. Jefferson Road, Whippany, N.J. 07981 and the Federal Communications Commission's commercial contractor.

PUB AS No. 1, Issue II Access Service
Issued: May, 1984 Available: May, 1984

The following technical publications are referenced in this tariff and may be obtained from the Government Printing Office, Superintendent of Documents, Document Control Branch, 940 No. Capital Street NE, Washington DC 20401.

(1) Telecommunications Service Priority (TSP) system for National Security Emergency Preparedness (NSEP) Service Handbook.

(2) National Communications System (NCS) Handbook 3-12, issued July 11, 1989, available August 1990.

Multiple Exchange Carrier Access Billing (MECAB) Guidelines
Issued: June, 1994

Multiple Exchange Carrier Ordering and Design (MECOD) Guidelines
Issued: June, 1994

The following publication is referenced in this tariff and may be obtained from Director-Sales Operations, Integrated Network Corporation, P.O. Box 6875, Bridgewater, N.J. 08807.

Integrated Network Corporation
Document CB-INC-100
Available: June, 1990

The following publication is referenced in this tariff and may be obtained from AT&T, 26 Parsippany Road, Whippany, N.J. 07981.

AT&T PUB 62310
(and its Addendum 2 and Addendum 3)
Available: October, 1989

ACCESS SERVICE

1. Application of Tariff

1.1 This Tariff contains regulations, rates and charges applicable to the provision of Switched Access Services, Special Access Services, Access Charge Residual Service, and other miscellaneous services, hereinafter referred to collectively as services(s), provided by the issuing carrier(s) of this tariff, hereinafter referred to as the Telephone Company, to customers.

1.2 The provision of such services by the Telephone Company as set forth in this Tariff does not constitute a joint undertaking with the customer for the furnishing of any service.

1.3 The provisions of this Tariff apply to intrastate intraLATA and interLATA access service. Charges will be billed to Telephone Company customers gaining access to the Telephone Company's local network for purposes of transporting intrastate traffic.

1.4 The rules and regulations set forth in this Tariff apply to access services provided by each of the Telephone Companies listed on the Title Page, Access Service rates are included in the Exhibits to this Tariff, as referenced in the various sections.

ACCESS SERVICE

2. General Regulations

2.1 Undertaking of the Telephone Company

2.1.1 Scope

(A) The Telephone Company does not undertake to transmit messages under this tariff.

(B) The Telephone Company shall be responsible only for the installation, operation and maintenance of the services it provides.

(C) The Telephone Company will, for maintenance purposes, test its services only to the extent necessary to detect and/or clear troubles.

(D) Services are provided 24 hours daily, seven days per week, except as set forth in other applicable sections of this tariff.

(E) The Telephone Company does not warrant that its facilities and services meet standards other than those set forth in this tariff.

2.1.2 Limitations

(A) The customer may not assign or transfer the use of services provided under this tariff; however, where there is no interruption of use or relocation of the services, such assignment or transfer may be made to:

(1) another customer, whether an individual, partnership, association or corporation, provided the assignee or transferee assumes all outstanding indebtedness for such services, and the unexpired portion of the minimum period and the termination liability applicable to such services, if any; or

ACCESS SERVICE

2. General Regulations (Cont'd)

2.1 Undertaking of the Telephone Company (Cont'd)

2.1.2 Limitations (Cont'd)

(A) (Cont'd)

(2) a court-appointed receiver, trustee or other person acting pursuant to law in bankruptcy, receivership, reorganization, insolvency, liquidation or other similar proceedings, provided the assignee or transferee assumes the unexpired portion of the minimum period and the termination liability applicable to such services, if any.

In all cases of assignment or transfer, the written acknowledgment of the Telephone Company is required prior to such assignment or transfer which acknowledgement shall be made within 15 days from the receipt of notification. All regulations and conditions contained in this tariff shall apply to such assignee or transferee.

The assignment or transfer of services does not relieve or discharge the assignor or transferor from remaining jointly or severally liable with the assignee or transferee for any obligations existing at the time of the assignment or transfer.

(B) The provisioning, use, and restoration of services shall be in accordance with Part 64, Subpart D, paragraph 64.401, of the Federal Communications Commission's Rules and Regulations, which specifies the priority system for such activities.

(C) Subject to compliance with the rules mentioned in (B) preceding, the services offered herein will be provided to customers on a first-come, first-served basis.

2. General Regulations (Cont'd)

2.1 Undertaking of the Telephone Company (Cont'd)

2.1.2 Limitations (Cont'd)

(C) (Cont'd)

First-come first-served shall be based upon the received time and date stamped by the Telephone Company on customer orders which contain the information as required for each respective service as delineated in other sections of this tariff. Customer orders shall not be deemed to have been received until such information is provided. Should questions arise which preclude order issuance due to missing information or the need for clarification, the Telephone Company will attempt to seek such missing information or clarification on a verbal basis.

2.1.3 Liability

(A) The Telephone Company's liability, if any, for its willful misconduct is not limited by this tariff. With respect to any other claim or suit, by a customer or by any others, for damages associated with the installation, provision, termination, maintenance, repair or restoration of service, and subject to the provisions of (B) through (H) following, the Telephone Company's liability, if any, shall not exceed an amount equal to the proportionate charge for the service for the period during which the service was affected. This liability for damages shall be in addition to any amounts that may otherwise be due the customer under this tariff as a Credit Allowance for a Service Interruption.

(B) The Telephone Company shall not be liable for any act or omission of any other carrier or customer providing a portion of a service, nor shall the Telephone Company for its own act or omission hold liable any other carrier or customer providing a portion of a service.

(C) The Telephone Company is not liable for damages to the customer premises resulting from the furnishing of a service, including the installation and removal of equipment and associated wiring, unless the damage is caused by the Telephone Company's negligence.

ACCESS SERVICE

2. General Regulations (Cont'd)

2.1 Undertaking of the Telephone Company (Cont'd)

2.1.3 Liability (Cont'd)

(D) The Telephone Company shall be indemnified, defended and held harmless by the end user against any claim, loss or damage arising from the end user's use of services offered under this tariff, involving:

(1) Claims for libel, slander, invasion of privacy, or infringement of copyright arising from the end user's own communications;

(2) Claims for patent infringement arising from the end user's acts combining or using the service furnished by the Telephone Company in connection with facilities or equipment furnished by the end user or customer or;

(3) All other claims arising out of any act or omission of the end user in the course of using services provided pursuant to this tariff.

(E) The Telephone Company shall be indemnified, defended and held harmless by the customer against any claim, loss or damage arising from the customer's use of services offered under this tariff involving;

(1) Claims for libel, slander, invasion of privacy, or infringement of copyright arising from the customer's own communications;

(2) Claims for patent infringement arising from the customer's acts combining or using the service furnished by the Telephone Company in connection with facilities or equipment furnished by the end user or customer or;

2. General Regulations (Cont'd)

2.1 Undertaking of the Telephone Company (Cont'd)

2.1.3 Liability (Cont'd)

(E) (Cont'd)

(3) All other claims arising out of any act or omission of the customer in the course of using services provided pursuant to this tariff.

(F) The Telephone Company does not guarantee or make any warranty with respect to its services when used in an explosive atmosphere. The Telephone Company shall be indemnified, defended and held harmless by the customer from any and all claims by any person relating to such customer's use of services so provided.

(G) No license under patents (other than the limited license to use) is granted by the Telephone Company or shall be implied or arise by estoppel, with respect to any service offered under this tariff. The Telephone Company will defend the customer against claims of patent infringement arising solely from the use by the customer of services offered under this tariff and will indemnify such customer for any damages awarded based solely on such claims.

(H) The Telephone Company's failure to provide or maintain services under this tariff shall be excused by labor difficulties, governmental orders, civil commotions, criminal actions taken against the Telephone Company, acts of God and other circumstances beyond the Telephone Company's reasonable control, subject to the Credit Allowance for a Service Interruption as set forth in 2.4.4 following.

ACCESS SERVICE

2. General Regulations (Cont'd)

2.1 Undertaking of the Telephone Company (Cont'd)

2.1.4 Provision of Services

The Telephone Company, to the extent that such services are or can be made available with reasonable effort, and after provision has been made for NSEP Services and the Telephone Company's telephone exchange services, will provide to the customer upon reasonable notice services offered in other applicable sections of this tariff at rates and charges specified therein.

ACCESS SERVICE

2. General Regulations (Cont'd)

2.1 Undertaking of the Telephone Company (Cont'd)

2.1.5 Installation and Termination of Services Other Than Interconnection

The services provided under this tariff (A) will include any entrance cable or drop wiring to that point where provision is made for termination of the Telephone Company's outside distribution network facilities at a mutually acceptable suitable location at a mutually agreeable customer-designated premises and (B) will be installed by the Telephone Company to such point of termination. Each Access Service has only one point of termination per customer premises. Any additional terminations beyond such point of termination are the sole responsibility of the customer. Moves of the point of termination at the customer's premises will be as set forth in 6.7.6 and 7.2.3 following.

For single unit premises the point of termination shall be a point within twelve inches of the protector or, where there is no protector, within twelve inches of where the telephone wire enters the customer's premises.

For multiunit premises existing as of August 13, 1990, the point of termination shall be determined in accordance with the Company's reasonable and nondiscriminatory standard operating practices. Where there are multiple points of termination within the multiunit premises, the point of termination for a customer shall not be further inside the customer's premises than a point twelve inches from where the wiring enters the customer's premises.

ACCESS SERVICE

2. General Regulations (Cont'd)

2.1 Undertaking of the Telephone Company (Cont'd)

2.1.5 Installation and Termination of Services Other Than Interconnection (Cont'd)

For multiunit premises in which wiring is installed after August 13, 1990, including additions, modifications and rearrangements of wiring existing prior to that date, the point of termination shall be placed at the minimum point of entry as determined in accordance with the Company's reasonable and nondiscriminatory standard operating practices. The minimum point of entry shall be either the closest practicable point to where the wiring crosses a property line or the closest practicable point to where the wiring enters the multiunit building or buildings. If the Company did not elect to place the point of termination at the minimum point of entry, the multiunit premises owner shall determine the location of the point or points of termination. The multiunit premises owner shall determine whether there shall be a single point of termination for all customers or separate such locations for each customer, provided however, that where there are multiple points of termination within the multiunit premises, the point of termination for a customer shall not be further inside the customer's premises than a point twelve inches from where the wiring enters the customer's premises.

ACCESS SERVICE

2. General Regulations (Cont'd)

2.1 Undertaking of the Telephone Company (Cont'd)

2.1.6 Maintenance of Services

The services provided under this tariff shall be maintained by the Telephone Company. The customer or others may not rearrange, move, disconnect, remove or attempt to repair any facilities provided by the Telephone Company, other than by connection or disconnection to any interface means used, except with the written consent of the Telephone Company.

ACCESS SERVICE

2. General Regulations (Cont'd)

2.1 Undertaking of the Telephone Company (Cont'd)

2.1.7 Changes and Substitutions

Except as provided for equipment and systems subject to FCC Part 68 Regulations at 47 C.F.R. Section 68.110(b), the Telephone Company may, where such action is reasonably required in the operation of its business, (A) substitute, change or rearrange any facilities used providing service under this tariff, including but not limited to, (1) substitution of different metallic facilities, (2) substitution of carrier or derived facilities for metallic facilities used to provide other than metallic facilities and (3) substitution of metallic facilities for carrier or derived facilities used to provide other than metallic facilities, (B) change minimum protection criteria, (C) change operating or maintenance characteristics of facilities or (D) change operations or procedures of the Telephone Company. In case of any such substitution, change or rearrangement, the transmission parameters will be within the range as set forth in 6. and 7. following. The Telephone Company shall not be responsible if any such substitution, change or rearrangement renders any customer furnished services obsolete or requires modification or alteration thereof or otherwise affects their use or performance. If such substitution, change or rearrangement materially affects the operating characteristics of the facility, the Telephone Company will provide reasonable notification to the customer in writing. Reasonable time will be allowed for any redesign and implementation required by the change in operating characteristics. The Telephone Company will work cooperatively with the customer to determine reasonable notification procedures.

ACCESS SERVICE

2. General Regulations (Cont'd)

2.1 Undertaking of the Telephone Company (Cont'd)

2.1.8 Refusal and Discontinuance of Service

(A) Unless the provisions of 2.2.1(B) or 2.5 following apply, if a customer fails to comply with 2.1.6 preceding or 2.2.2, 2.3.1, 2.3.4, 2.3.5 or 2.4 following, including any payments to be made by it on the dates and times herein specified, the Telephone Company may, on thirty (30) days written notice by Certified U.S. Mail to the person designated by that customer to receive such notices of noncompliance, refuse additional applications for service and/or refuse to complete any pending orders for service by the non-complying customer at any time thereafter.

ACCESS SERVICE

2. General Regulations (Cont'd)

2.1 Undertaking of the Telephone Company (Cont'd)

2.1.8 Refusal and Discontinuance of Service (Cont'd)

(A) (Cont'd)

If the Telephone Company does not refuse additional applications for service on the date specified in the thirty (30) days notice, and the customer's noncompliance continues, nothing contained herein shall preclude the Telephone Company's right to refuse additional applications for service to the non-complying customer without further notice.

(B) Unless the provisions of 2.2.1(B) or 2.5 following apply, if a customer fails to comply with 2.1.6 preceding or 2.2.2, 2.3.1, 2.3.4, 2.3.5 or 2.4 following, including any payments to be made by it on the dates and times herein specified, the Telephone Company may, on thirty (30) days written notice by Certified U.S. Mail to the person designated by that customer to receive such notices of noncompliance, discontinue the provision of the services to the non-complying customer at any time thereafter. In the case of such discontinuance, all applicable charges, including termination charges shall become due. If the Telephone Company does not discontinue the provision of the services involved on the date specified in the thirty (30) days notice, and the customer's noncompliance continues, nothing contained herein shall preclude the Telephone Company's right to discontinue the provision of the services to the non-complying customer without further notice.

2. General Regulations (Cont'd)

2.1 Undertaking of the Telephone Company (Cont'd)

2.1.9 Limitation of Use of Metallic Facilities

Signals applied to a metallic facility shall conform to the limitations set forth in Technical Reference Publication AS No. 1. In the case of application of dc telegraph signaling systems, the customer shall be responsible, at its expense, for the provision of current limiting devices to protect the Telephone Company facilities from excessive current due to abnormal conditions and for the provision of noise mitigation networks when required to reduce excessive noise.

2.1.10 Notification of Service-Affecting Activities

The Telephone Company will provide the customer reasonable notification of service-affecting activities that may occur in normal operation of its business. Such activities may include, but are not limited to, equipment or facilities additions, removals or rearrangements, routine preventative maintenance and major switching machine change-out. Generally, such activities are not individual customer service specific, they affect many customer services. No specific advance notification period is applicable to all service activities. The Telephone Company will work cooperatively with the customer to determine the notification requirements.

2.1.11 Coordination with Respect to Network Contingencies

The Telephone Company intends to work cooperatively with the customer to develop network contingency plans in order to maintain maximum network capability following natural or man-made disasters which affect telecommunications services. All contingency plans will be in accordance with 2.1.2(B) preceding.

2.1.12 Provision and Ownership of Telephone Numbers

The Telephone Company reserves the reasonable right to assign, designate or change telephone numbers, any other call number designations associated with Access Services, or the Telephone Company serving central office prefixes associated with such numbers, when necessary in the conduct of its business. Should it become necessary to make a change in such number(s), the Telephone Company will furnish to the customer 6 months notice, by Certified U.S. Mail, of the effective date and an explanation of the reason(s) for such change(s).

2. General Regulations (Cont'd)

2.1 Undertaking of the Telephone Company (Cont'd)

2.1.13 Preemption of Service

In certain instances, i.e., no spare services are available, it may be necessary to preempt existing services to provision or restore NSEP Services. If, in its best judgement, the Telephone Company deems it necessary to preempt, then the Telephone Company will ensure that:

(A) A sufficient number of public switched services are available for public use if preemption of such services is necessary to provision NSEP TSP Service.

(B) The services preempted have a lower or no assigned TSP priority.

(C) A reasonable effort is made to notify the preempted service customer of the action to be taken.

(D) A credit allowance for any preempted service shall be made in accordance with the provisions set forth in Section 2.4.4(A).

2.2 Use

2.2.1 Interference or Impairment

(A) The characteristics and methods of operation of any circuits, facilities or equipment provided by other than the Telephone Company and associated with the facilities utilized to provide services under this tariff shall not interfere with or impair service over any facilities of the Telephone Company, its affiliated companies, or its connecting and concurring carriers involved in its services, cause damage to their plant, impair the privacy of any communications carried over their facilities or create hazards to the employees of any of them or the public.

2. General Regulations (Cont'd)

2.2 Use (Cont'd)

2.2.1 Interference or Impairment (Cont'd)

(B) Except as provided for equipment or systems subject to the FCC Part 68 Rules in 47 C.F.R. Section 68.108, if such characteristics or methods of operation are not in accordance with (A) preceding, the Telephone Company will, where practicable, notify the customer that temporary discontinuance of the use of a service may be required; however, where prior notice is not practicable, nothing contained herein shall be deemed to preclude the Telephone Company's right to temporarily discontinue forthwith the use of a service if such action is reasonable under the circumstances. In case of such temporary discontinuance, the customer will be promptly notified and afforded the opportunity to correct the condition which gave rise to the temporary discontinuance. During such period of temporary discontinuance, credit allowance for service interruptions as set forth in 2.4.4 following is not applicable.

2.2.2 Unlawful and Abusive Use

(A) The service provided under this tariff shall not be used for an unlawful purpose or used in an abusive manner.

Abusive use includes:

(1) The use of the service of the Telephone Company for a call or calls, anonymous or otherwise, in a manner reasonably expected to frighten, abuse, torment, or harass another;

(2) The use of the service in such a manner as to interfere unreasonably with the use of the service by one or more other customers.

2. General Regulations (Cont'd)

2.2 Use (Cont'd)

2.2.2 Unlawful and Abuse Use (Cont'd)

(B) The Telephone Company may, upon written request from a customer, or another exchange carrier, terminate service to any subscriber or customer identified as having utilized service provided under this tariff in the completion of abusive or unlawful telephone calls. Service shall be terminated by the Telephone Company as provided for in its general and/or local exchange service tariffs.

(C) In such instances when termination occurs, as in (B) preceding, the Telephone Company shall be indemnified, defended and held harmless by any customer or Exchange Carrier requesting termination of service against any claim, loss or damage arising from the Telephone Company's actions in terminating such service, unless caused by the Telephone Company's negligence.

2. General Regulations (Cont'd)

2.3 Obligations of the Customer

2.3.1 Damages

The customer shall reimburse the Telephone Company for damages to Telephone Company facilities utilized to provide services under this tariff caused by the negligence or willful act of the customer or resulting from the customer's improper use of the Telephone Company facilities, or due to malfunction of any facilities or equipment provided by other than the Telephone Company. Nothing in the foregoing provision shall be interpreted to hold one customer liable for another customer's actions. The Telephone Company will, upon reimbursement for damages, cooperate with the customer in prosecuting a claim against the person causing such damage and the customer shall be subrogated to the right of recovery by the Telephone Company for the damages to the extent of such payment.

2.3.2 Ownership of Facilities and Theft

Facilities utilized by the Telephone Company to provide service under the provisions of this tariff shall remain the property of the Telephone Company. Such facilities shall be returned to the Telephone Company by the customer, whenever requested, within a reasonable period following the request in as good condition as reasonable wear will permit.

2.3.3 Equipment Space and Power

The customer shall furnish or arrange to have furnished to the Telephone Company, at no charge, equipment space and electrical power required by the Telephone Company to provide services under this tariff at the points of termination of such services. The selection of ac or dc power shall be mutually agreed to by the customer and the Telephone Company. The customer shall also make necessary arrangements in order that the Telephone Company will have access to such spaces at reasonable times for installing, testing, repairing or removing Telephone Company services.

2. General Regulations (Cont'd)

2.3 Obligations of the Customer (Cont'd)

2.3.4 Availability for Testing

The services provided under this tariff shall be available to the Telephone Company at times mutually agreed upon in order to permit the Telephone Company to make tests and adjustments appropriate for maintaining the services in satisfactory operating condition. Such tests and adjustments shall be completed within a reasonable time. No credit will be allowed for any interruptions involved during such tests and adjustments.

2.3.5 Balance

All signals for transmission over the services provided under this tariff shall be delivered by the customer balanced to ground except for ground start, duplex (DX) and McCulloh-Loop (Alarm System) type signaling and dc telegraph transmission at speeds of 75 baud or less.

2.3.6 Design of Customer Services

Subject to the provisions of 2.1.7 preceding, the customer shall be solely responsible, at its own expense, for the overall design of its services and for any redesigning or rearrangement of its services which may be required because of changes in facilities, operations or procedures of the Telephone Company, minimum protection criteria or operating or maintenance characteristics of the facilities.

2. General Regulations (Cont'd)

2.3 Obligations of the Customer (Cont'd)

2.3.7 References to the Telephone Company

The customer may advise End Users that certain services are provided by the Telephone Company in connection with the service the customer furnishes to End Users; however, the customer shall not represent that the Telephone Company jointly participates in the customer's services.

2.3.8 Claims and Demands for Damages

(A) With respect to claims of patent infringement made by third persons, the customer shall defend, indemnify, protect and save harmless the Telephone Company from and against all claims arising out of the combining with, or use in connection with, the services provided under this tariff, any circuit, apparatus, system or method provided by the customer.

(B) The customer shall defend, indemnify and save harmless the Telephone Company from and against any suits, claims, losses or damages, including punitive damages, attorney fees and court costs by third persons arising out of the construction, installation, operation, maintenance, or removal of the customer's circuits, facilities, or equipment connected to the Telephone Company's services provided under this tariff, including, without limitation, Workmen's Compensation claims, actions for infringement of copyright and/or unauthorized use of program material, libel and slander actions based on the content of communications transmitted over the customer's circuits, facilities or equipment, and proceedings to recover taxes, fines, or penalties for failure of the customer to obtain or maintain in effect any necessary certificates, permits, licenses, or other authority to acquire or operate the

ACCESS SERVICE

2. General Regulations (Cont'd)

2.3 Obligations of the Customer (Cont'd)

2.3.8 Claims and Demands for Damages (Cont'd)

(B) (Cont'd)

services provided under this tariff; provided, however, the foregoing indemnification shall not apply to suits, claims, and demands to recover damages for damage to property, death, or personal injury unless such suits, claims or demands are based on the tortuous conduct of the customer, its officers, agents or employees.

(C) The customer shall defend, indemnify and save harmless the Telephone Company from and against any suits, claims, losses or damages, including punitive damages, attorney fees and court costs by the customer or third parties arising out of any act or omission of the customer in the course of using services provided under this tariff.

2. General Regulations (Cont'd)

2.3 Obligations of the Customer (Cont'd)

2.3.9 Coordination with Respect to Network Contingencies

The customer shall, in cooperation with the Telephone Company, coordinate in planning the actions to be taken to maintain maximum network capability following natural or man-made disasters which affect telecommunications services. This will be done in accordance with 2.1.2(B) preceding.

2.3.10 Jurisdictional Report Requirements

(A) Jurisdictional Reports

The Percent of Interstate Use (PIU) factors described in (1) through (5) following are applied to usage-rated Access Charge Residual, Directory Assistance Information Surcharge, Local Switching, Tandem-Switched Transport, and Residual Interconnection charges. Separate PIUs are required for flat-rated Entrance Facilities, DirectTrunked Transport, and Multiplexers. A letter on file provided by the customer for reporting PIUs will be accepted by the Telephone Company. A consolidated PIU provided by the customer for all rate elements will also be accepted by the Telephone Company if the consolidated PIU is representative of the actual interstate use of the service. The customer reported PIU will be provided in a whole number (a number 0-100) to the Telephone Company.

(1) (a) When a customer orders Feature Group A and/or Feature Group B Switched Access Service, the customer shall, in its order, state the projected interstate percentage for interstate usage for each Feature Group A and/or Feature Group B Switched Access Service group ordered. If the customer discontinues some but not all of the Feature Group A and/or Feature Group B Switched Access Services in a group, it shall provide the projected interstate percentage for such services which are discontinued.

2. General Regulations (Cont'd)

2.3 Obligations of the Customer (Cont'd)

2.3.10 Jurisdictional Report Requirements (Cont'd)

(A) Jurisdictional Reports (Cont'd)

(1) (Cont'd)

(b) Pursuant to Federal Communications Commission Order FCC 85-145 adopted April 16, 1985, interstate usage is to be developed as though every call that enters a customer network at a point within the same state as that in which the called station (as designated by the called station telephone number) is situated is an intrastate communication and every call for which the point of entry is in a state other than that where the called station (as designated by the called station telephone number) is situated is an interstate communication.

(c) The projected interstate percentages will be used by the Telephone Company to apportion the usage between interstate and intrastate until a revised report is received as set forth in (6) following.

ACCESS SERVICE

2. General Regulations (Cont'd)

2.3 Obligations of the Customer (Cont'd)

2.3.10 Jurisdictional Report Requirements (Cont'd)

(A) Jurisdictional Reports (Cont'd)

(2) All single Feature Group A and B Switched Access Service usage and charges will be apportioned by the telephone Company between interstate and intrastate. The projected interstate percentage reported as set forth in 1(a) and 1(b) preceding will be used to make such apportionment.

(3) For multiple hunt group or trunk group arrangements where either the interstate or the intrastate charges are based on measured usage, the interstate Feature Group A and/or Feature Group B Switched Access Service(s) information reported as set forth in (1) preceding will be used to determine the charges as follows:

For all groups the number of access minutes (either measured or assumed) for a group will be multiplied by the projected interstate percentage to develop the interstate access minutes. The number of access minutes for the group minus the developed interstate access minutes for the group will be the developed intrastate access minutes.

ACCESS SERVICE

2. General Regulations (Cont'd)

2.3 Obligations of the Customer (Cont'd)

2.3.10 Jurisdictional Report Requirements (Cont'd)

(A) Jurisdictional Reports (Cont'd)

(4) When a customer orders Feature Group C or Feature Group D Switched Access Service(s), unless the Telephone Company can determine the jurisdiction from the call detail, the customer will provide the projected interstate percentage for interstate usage for each end office group in its order. In the event the Telephone Company needs to project the interstate percentage, it will be determined as follows. For originating access minutes, the projected interstate percentage will be developed on a monthly basis by end office when the Feature Group C or Feature Group D Switched Access Service access minutes are measured by dividing the measured interstate originating access minutes (the access minutes where the calling number is in one state and the called number is in another state) by the total originating access minutes, when the call detail is adequate to determine the appropriate jurisdiction. For terminating access minutes, the data used by the Telephone Company to develop the projected interstate percentage for originating access minutes will be used to develop projected interstate percentage for such terminating access minutes.

ACCESS SERVICE

2. General Regulations (Cont'd)

2.3 Obligations of the Customer (Cont'd)

2.3.10 Jurisdictional Report Requirements (Cont'd)

(A) Jurisdictional Reports (Cont'd)

(4) (Cont'd)

When originating call details are insufficient to determine the jurisdiction for the call, the customer shall supply the projected interstate percentage or authorize the Telephone Company to use the Telephone Company developed percentage. This percentage shall be used by the Telephone Company as the interstate percentage for such call detail. The Telephone Company will designate the number obtained by subtracting the projected interstate percentage for originating and terminating access minutes calculated by the Telephone Company from 100 (100 - Telephone Company calculated projected interstate percentage = intrastate percentage) as the projected intrastate percentage of use.

ACCESS SERVICE

2. General Regulations (Cont'd)

2.3 Obligations of the Customer (Cont'd)

2.3.10 Jurisdictional Report Requirements (Cont'd)

(A) Jurisdictional Reports (Cont'd)

(5) Except where Telephone Company measured access minutes are used as set forth in (4) preceding, the customer reported interstate percentage of use as set forth in (1) or (4) preceding will be used until the customer reports a different projected interstate percentage for an in service end office group. When the customer adds BHMC lines or trunks to an existing end office group, the customer shall furnish a projected interstate percentage that applies to the added BHMC, lines or trunks. When the customer discontinues BHMC, lines or trunks from an existing group, the customer shall furnish a projected interstate percentage for the discontinued BHMC, lines or trunks in the end office group. The revised report will serve as the basis for future billing and will be effective on the next bill date. No prorating or back billing will be done based on the report.

The customer shall update the interstate and intrastate jurisdictional report on a quarterly basis. The customer shall forward to the Company a revised report, to be received no later than fifteen (15) days after the first of January, April, July and October. The revised report shall show the interstate percentage for the most current data available for each service arranged for interstate use. This data shall consist of at least three (3) and no more than twelve (12) consecutive months of data, ending no more than 75 days earlier than the date the report is due (e.g., for the report due January 15, the last month of data should be no earlier than October 31). The updated interstate percentage shall be based on call detail records. The interstate percentage can be based on a statistically valid sample. The percent interstate use reported in January, April, July and October will be effective on the bill date of each such month and will serve as the basis for the next three months billing beginning in February, May, August and November, respectively.

ACCESS SERVICE

2. General Regulations (Cont'd)

2.3 Obligations of the Customer (Cont'd)

2.3.10 Jurisdictional Report Requirements (Cont'd)

(A) Jurisdictional Reports (Cont'd)

(5) (Cont'd)

Additionally, where the customer utilizes FGA Switched Access Service for calls between a Primary Exchange Carrier and a Secondary Exchange Carrier within the same Extended Area Service calling area, and/or Feature Group B Switched Access Service for calls between a Primary Exchange Carrier's access tandem and a subtending Secondary Exchange Carrier, where the Primary and Secondary Exchange Carriers are not the same Telephone Company and do not provide service under the same access service tariff, a copy of the revised report will be provided by the customer to each Secondary Exchange Carrier. The revised report will serve as the basis for the next three months' billing and will be effective on the bill date for that service.

The customer is required to provide quarterly updates to the jurisdictional reports. Upon receipt by the Company, the updated report will serve as the basis for future billing and will be effective on the next bill date for that service. No prorating or back billing will be done based on the report. However, delayed charges will be billed utilizing the interstate percentage that was in effect at the time the charges were incurred.

When the quarterly reports are not supplied by the customer, the following steps, as set forth in (a) through (e) following, will be taken by the Company.

(a) If the customer does not supply the reports, the Company will assume the percentages to be the same as those provided in the last quarterly report. For those cases in which a quarterly report has never been received from the customer, the Company will assume the percentages to be the same as those provided in the order for service as set forth in (1) through (4) preceding.

ACCESS SERVICE

2. General Regulations (Cont'd)

2.3 Obligations of the Customer (Cont'd)

2.3.10 Jurisdictional Report Requirements (Cont'd)

(A) Jurisdictional Reports (Cont'd)

(5) (Cont'd)

(b) If no report is received by the date specified, the Company will send a letter to the customer (by certified U.S. Mail, return receipt requested) requesting an updated interstate percentage within thirty (30) days and reminding them that if no report is received, the procedures set forth in (c), following, will begin.

(c) If no report is received within thirty (30) days, the Company will designate a fifty percent (50%) interstate percentage beginning with the next billing period. This interstate percentage will be applied until an updated PIU report is submitted or until the provisions set forth in (d) or (e) following are met. The Company will send a letter to the customer (by certified U.S. Mail, return receipt requested) requesting the work papers and summary, as described in 2.3.10(B)(1)(i), following, used by the customer to substantiate the most recent interstate percentage. The requested information must be submitted by the customer to the Company within thirty (30) days after receipt of the certified letter.

ACCESS SERVICE

2. General Regulations (Cont'd)

2.3 Obligations of the Customer (Cont'd)

2.3.10 Jurisdictional Report Requirements (Cont'd)

(A) Jurisdictional Reports (Cont'd)

(5) (Cont'd)

(d) Upon receipt of the customer's work papers and summary, the Company will begin using the interstate percentage derived from the work papers and summary with the next billing period and will review the work papers and summary submitted within thirty (30) days from receipt of the information.

(e) If after review of the information, it is determined that a billing dispute exists, the Company will continue to use the derived interstate percentage and begin audit procedures as set forth in 2.3.10(B)(1), following.

ACCESS SERVICE

2. General Regulations (Cont'd)

2.3 Obligations of the Customer (Cont'd)

2.3.10 Jurisdictional Report Requirements (Cont'd)

(B) Jurisdictional Report Dispute and Auditing Procedures

If a billing dispute arises concerning the projected interstate percentage the Company will ask the customer to provide the data the customer uses to determine the projected interstate percentage as described in (1) and (2), following.

(1) Switched Access Services

(a) If the Company questions the information provided by the customer in 2.3.10(A)(5), preceding, the Company will send a letter to the customer (by certified U.S. Mail, return receipt requested) requesting that the customer contact the Company to discuss and explain their report within thirty (30) days of the Company's request.

(b) If no response is received from the customer, the Company will send a letter to the customer (by certified U.S. Mail, return receipt requested) requesting the work papers and summary as described in (i), following, used by the customer to substantiate the most recent interstate percentage. The requested information must be submitted by the customer to the Company within thirty (30) days after receipt of the certified letter.

(c) If the customer submits the work papers and summary as requested in (b), the Company will review this information within thirty (30) days after receipt of the customer's information.

ACCESS SERVICE

2. General Regulations (Cont'd)

2.3 Obligations of the Customer (Cont'd)

2.3.10 Jurisdictional Report Requirements (Cont'd)

(B) Jurisdictional Report Dispute and Auditing Procedures (Cont'd)

(1) Switched Access (Cont'd)

(d) If after review of the documentation, the Company and the customer establish a revised interstate percentage, the Company will begin using the percentage with the next billing period.

(e) If the Company and the customer do not establish a revised interstate percentage, the Company will begin the procedures as set forth in (g), following.

(f) If no response is received from the customer, the Company will begin the auditing procedures as set forth in (g), following, and notify the Commission.

ACCESS SERVICE

2. General Regulations (Cont'd)

2.3 Obligations of the Customer (Cont'd)

2.3.10 Jurisdictional Report Requirements (Cont'd)

(B) Jurisdictional Report Dispute and Auditing Procedures (Cont'd)

(1) Switched Access (Cont'd)

(g) When jurisdictional reports are not provided by the customer or a billing dispute arises, the Company may request an audit. The audit procedures and responsible party(ies) for payment of audit expenses will be determined as follows:

- If the Company and the customer mutually agree upon an independent Certified Public Accountant (CPA) auditing firm and the party(ies) agree to equally share in the payment of audit expenses, both the Company and the customer will be bound by such agreement; or

- The customer may select an independent CPA auditing firm and pay all audit expenses.

- If the audit is not conducted as set forth preceding, the Company may select an independent CPA auditing firm and pay all audit expenses.

(h) The Company will adjust the customer's PIU based upon the audit results. The PIU resulting from the audit shall be applied to the usage for the quarter the audit is completed, the usage for the quarter prior to completion of the audit and the usage for the two (2) quarters following the completion of the audit. After that time, the customer may report a revised PIU pursuant to 2.3.10(A)(5), preceding. The Company will implement the revised interstate percentage to the next billing period or quarterly report date, whichever is first.

2. General Regulations (Cont'd)

2.3 Obligations of the Customer (Cont'd)

2.3.10 Jurisdictional Report Requirements (Cont'd)

(B) Jurisdictional Report Dispute and Auditing Procedures (Cont'd)

(1) Switched Access (Cont'd)

(i) The customer shall maintain and retain the work papers that show how the interstate percentage was determined and a summary derived from the actual call detail records for a minimum twelve month period which statistically substantiates each interstate percentage provided to the Company as set forth in 2.3.10(A)(5), preceding. This summary at a minimum shall include month, year, state, traffic type (e.g., originating, terminating, 500, 800, 900, etc.) and service type.

(j) If the customer does not provide the work papers and/or summary in accordance with the provisions set forth in this tariff or if a billing dispute is not resolved from the submission of such work papers, the Company shall request the actual call detail records or a statistically valid sample of such records, as set forth in 2.3.10(A)(5), preceding, on a prospective basis, not to exceed a consecutive three (3) month period. The actual call detail records will be used to statistically substantiate the interstate percentage provided to the Company and the process by which it is developed. Such call detail records shall consist of call information, including call terminating address (i.e., called number), call duration, the trunk group number(s), or access line number(s) over which the call is routed and the point at which the call enters the customer's network. The Company will not request such data more than once a year.

ACCESS SERVICE

2. General Regulations (Cont'd)

2.3 Obligations of the Customer (Cont'd)

2.3.10 Jurisdictional Report Requirements (Cont'd)

(B) Jurisdictional Report Dispute and Auditing Procedures (Cont'd)

(2) Special Access

For Special Access Service and Access Service Billing (as described in 13.3.3), the Company will ask the customer to provide the data the customer uses to determine the projected interstate percentage if a billing dispute arises or a regulatory commission questions the customer-provided interstate percentage. The customer shall supply the data within thirty (30) days of the Company request. The Company will not request such data more than once a year. The customer shall keep records of system design and functions from which the percentage of interstate and intrastate use can be ascertained and, upon request of the Company, make the records available for inspection as reasonably necessary for purposes of verification of the percentages.

(3) Jurisdictional Report Proprietary Information

The data the customer provides to the Company to support their interstate percentage is considered proprietary to the customer. The Company agrees to use and protect such information by exercising the same degree of care normally used to protect its own proprietary information.

ACCESS SERVICE

2. General Regulations (Cont'd)

2.3 Obligations of the Customer (Cont'd)

2.3.10 Jurisdictional Report Requirements (Cont'd)

(B) Jurisdictional Report Dispute and Auditing Procedures (Cont'd)

(4) Contested Audits (Cont'd)

When a jurisdictional audit is conducted by the Company or an independent Certified Public Accountant (CPA) auditing firm selected by the Company, the audit results will be furnished to the customer by certified U.S. Mail (return receipt requested). The customer may contest the audit results by providing written notification (by certified U.S. Mail, return receipt requested), to the Company within fifteen (15) calendar days from the date the audit report is furnished to the customer by certified U.S. Mail (return receipt requested). When a jurisdictional audit is conducted by an independent Certified Public Accountant (CPA) auditing firm selected by the customer, the audit results will be furnished to the Company by certified U.S. Mail (return receipt requested). The Company may contest the audit results by providing written notification (by certified U.S. Mail, return receipt requested) to the customer within fifteen (15) calendar days from the date the audit report is furnished to the Company by certified U.S. Mail (return receipt requested).

Contested audits will be resolved by the Company and the customer within thirty (30) days of written notification, or a neutral arbitrator will be mutually agreed upon by the Company and the customer. During the initial thirty (30) day resolution period, the company and the customer will review the audit process and the data used to calculate the PIU percentage in an attempt to resolve the dispute. Should the Company and the customer resolve the dispute on the PIU percentage, a neutral arbitrator would not be warranted.

ACCESS SERVICE

2. General Regulations (Cont'd)

2.3 Obligations of the Customer (Cont'd)

2.3.10 Jurisdictional Report Requirements (Cont'd)

(B) Jurisdictional Report Dispute and Auditing Procedures (Cont'd)

(4) Contested Audits (Cont'd)

Contested audits will be resolved by a neutral arbitrator mutually agreed upon by the Company and the customer. The arbitration hearing will be conducted in Lincoln, Nebraska or a location within the Company operating territory that is mutually agreed upon by both parties. The arbitration proceeding, including the decision rendered, shall be governed by the law (both statutory and case) of the state in which the arbitration hearing is held, including, but not limited to the Uniform Arbitration Act, as adopted in that state.

Prior to the arbitration hearing, each party shall notify the arbitrator of the PIU percentage which that party believes to be correct. The arbitrator, in deciding, may adopt the PIU percentage of either party or may adopt a PIU percentage different from those proposed by the parties.

2. General Regulations (Cont'd)

2.3 Obligations of the Customer (Cont'd)

2.3.10 Jurisdictional Report Requirements (Cont'd)

(B) Jurisdictional Report Dispute and Auditing Procedures (Cont'd)

(4) Contested Audits (Cont'd)

If the arbitrator adopts a PIU percentage proposed by one of the parties, the other party (whose PIU percentage was not adopted) shall pay all costs of the arbitration. If the arbitrator adopts a PIU percentage higher than the PIU percentages proposed by both parties, then the party proposing the lower PIU percentage shall pay all costs of the arbitration. If the arbitrator adopts a PIU percentage lower than the PIU percentage proposed by both parties, then the party proposing the higher PIU percentage shall pay all costs of the arbitration. If the arbitrator adopts a PIU percentage which falls between the two percentages proposed by the parties, then the parties shall each pay one-half of the arbitration costs.

Absent written notification, within the timeframe as set forth preceding, audit results cannot be contested and the Company will adjust the customer's PIU percentage based upon the audit results as set forth in 2.3.10(B)(1)(h), preceding.

ACCESS SERVICE

2. General Regulations (Cont'd)

2.3 Obligations of the Customer (Cont'd)

2.3.10 Jurisdictional Report Requirements (Cont'd)

(C) When an 8XX Data Base query, as described in 6.1.2(C)(2) following, is performed to determine carrier selection, and the associated Switched Access service is provided in whole or in part by the Company, the Percentage for Interstate Use (PIU) for the query will be the same as that of the Switched Access service, as described in (4) preceding.

When a customer's 8XX Data Base queries include one or more vertical service features, as described in 6.1.2(C)(2) following, the customer shall provide the Company with the proportion of the vertical service queries which is to be provided for interstate use. A PIU should be provided for each Service Switching Point (SSP) from which 8XX vertical service queries may originate.

2. General Regulations (Cont'd)

2.3 Obligations of the Customer (Cont'd)

2.3.11 Determination of Intrastate Charges for Mixed Interstate and Intrastate Access Service

When mixed interstate and intrastate Access Service is provided, all charges (i.e., nonrecurring, monthly and/or usage) including optional features charges, will be prorated between interstate and intrastate. The percentage provided in the reports as set forth in 2.3.10 (A) preceding will serve as the basis for prorating the charges. The percentage of an Access Service to be charged as intrastate is applied in the following manner:

(A) For monthly and nonrecurring chargeable rate elements, multiply one minus percentage of interstate use times the quantity of chargeable elements times the stated tariff rate per element.

(B) For usage sensitive (i.e., access minutes and calls) chargeable rate elements, multiply one minus percentage of interstate use times actual use (i.e., measured or Telephone Company assumed average use) times the stated tariff rate.

The percentage of interstate use will change as revised usage reports are submitted as set forth in 2.3.10 preceding

ACCESS SERVICE

2. General Regulations (Cont'd)

2.3 Obligations of the Customer (Cont'd)

2.3.12 Identification and Rating of VoIP-PSTN Traffic (N)

(A) Scope

(1) VoIP-PSTN traffic is defined as traffic exchanged over the public switched telephone network ("PSTN") facilities that originates and/or terminates in Internet protocol ("IP") format. This section governs the identification of toll VoIP-PSTN ("toll VoIP") traffic that in the absence of an interconnection agreement will be subject to interstate switched access rates in accordance with the Federal Communications Commission Report and Order in WC Docket Nos. 10-90, etc., FCC Release No. 11-161 (Nov. 18, 2011) ("FCC Order") as it may hereinafter be amended or clarified. Specifically, this section establishes the method of distinguishing toll VoIP traffic from the customer's total intrastate access traffic, so that toll VoIP traffic will be billed in accordance with the FCC Order.

(2) This section will be applied to the billing of switched access charges to a customer that is a local exchange carrier only to the extent that the customer has also implemented billing of interstate access charges for VoIP-PSTN Traffic in accordance with the FCC Order.

(B) Rating of toll VoIP-PSTN traffic

The Telephone Company will bill toll VoIP-PSTN traffic which it identifies in accordance with this tariff section at rates equal to the Telephone Company's applicable tariffed interstate switched access rates.

(C) Calculation and Application of Percent-VoIP-Usage Factor

The Telephone Company will determine the number of toll VoIP traffic minutes of use ("MOU") to which it will apply its interstate rates under subsection (B), above, by applying an originating Percent VoIP Usage ("OPVU") factor to the total intrastate access MOU originated by a Telephone Company end user and delivered to the customer and by applying a terminating PVU ("TPVU") factor to the total intrastate access MOU terminated by a customer to the Telephone Company's end user. The OPVU and TPVU will be derived and applied as follows:

(1) The customer will calculate and furnish to the Telephone Company an OPVU factor, along with supporting documentation, representing the whole number percentage of the customer's total originating intrastate access MOU that the customer receives from the Telephone Company in the State that is originated by the Telephone Company in IP format.

(2) The customer will calculate and furnish to the Telephone Company a TPVU factor, along with supporting documentation, representing the whole number percentage of the customer's total terminating intrastate access MOU that the customer exchanges with the Telephone Company in the State that is sent to the Telephone Company and originated in IP format. (N)

RECEIVED
DEC 20 2011
NPSC-Comm. Dept.

ACCESS SERVICE

2. General Regulations (Cont'd)

2.3 Obligations of the Customer (Cont'd)

2.3.12 Identification and Rating of VoIP-PSTN Traffic (Cont'd)

(N)

(C) Calculation and Application of Percent-VoIP-Usage Factor (Cont'd)

(3) The OPVU, TPVU and supporting documentation shall be based on information that is verifiable by the Telephone Company including but not limited to the number of the customer's retail VoIP subscriptions in the state (*e.g.*, as reported on FCC Form 477), traffic studies, actual call detail, or other relevant and verifiable information. The customer shall not modify its reported PIU factor to account for VoIP-PSTN traffic.

(4) After the Telephone Company verifies the OPVU and TPVU provided by the customer the Telephone Company will apply the OPVU and TPVU factors to the associated intrastate access MOU as indicated in Sections (D) and/or (E) below.

In the event that the Telephone Company can not verify the customer's OPVU and/or TPVU, the Telephone Company will request additional information to support the OPVU and/or TPVU, during this time no changes will be made to the existing OPVU and /or TPVU. The customer shall supply the requested additional information within 15 days of the Telephone Company's request or no changes will be made to the existing OPVU and/or TPVU. If after review of the additional information, the customer and Telephone Company establish a revised and mutually agreed upon OPVU and/or TPVU factor, the Telephone Company will begin using the new factor with the next bill period.

If the dispute is unresolved the customer may request that verification audits be conducted by an independent auditor, at customer's sole expense. During the audit, the most recent undisputed OPVU and/or TPVU factor will be used by the Telephone Company.

(5) In the absence of an interconnection agreement, at no time will the Telephone Company allow an OPVU or TPVU factor greater than the applicable State percentage as identified in Paragraph 963 of the FCC Order.

(N)

RECEIVED
DEC 20 2011
NPSC-Comm. Dept.

2. General Regulations (Cont'd)

2.3 Obligations of the Customer (Cont'd)

2.3.12 Identification and Rating of VoIP-PSTN Traffic (Cont'd) (N)

(D) Initial OPVU and TPVU Factor

In calculating the initial OPVU and TPVU factor(s), the Telephone Company will take the factor(s) provided by the customer into account retroactively to January 1, 2012, *provided that* the customer provides the factor(s) and supporting documentation, as specified in subsection (C) above to the Telephone Company no later than 15 days after the effective date of this tariff. If the customer does not furnish the Telephone Company with an OPVU and/or TPVU factor pursuant to the preceding subsection (C), the initial factor will be zero.

(E) OPVU and TPVU Factor Updates

The customer may update the OPVU and/or TPVU factor(s) semi-annually using the method set forth in subsection (C), above. If the customer chooses to submit such updates, it shall forward to the Telephone Company, no later than 15 days after the first day of January and/or July of each year, a revised OPVU and/or TPVU factor and supporting documentation based on data for the prior three months, ending the last day of December and/or June, respectively. Once verified by the Telephone Company the revised OPVU and/or TPVU factor will apply prospectively and serve as the basis for billing until superseded by a new verified factor.

(N)

RECEIVED
DEC 20 2011
NPSC-Comm. Dept.

2. General Regulations (Cont'd)

2.4 Payment Arrangements and Credit Allowances

2.4.1 Payment of Rates, Charges and Deposits

(A) The Telephone Company will, in order to safeguard its interests, only require a customer which has a proven history of late payments to the Telephone Company or does not have established credit, to make a deposit prior to or at any time after the provision of a service to the customer to be held by the Telephone Company as a guarantee of the payment of rates and charges. No such deposit will be required of a customer which is a successor of a company which has established credit and has no history of late payments to the Telephone Company. Such deposit may not exceed the actual or estimated rates and charges for the service for a two month period. The fact that a deposit has been made in no way relieves the customer from complying with the Telephone Company's regulations as to the prompt payment of bills. At such time as the provision of the service to the customer is terminated, the amount of the deposit will be credited the customer's account and any credit balance which may remain will be refunded.

2. General Regulations (Cont'd)

2.4 Payment Arrangements and Credit Allowances (Cont'd)

2.4.1 Payment of Rates, Charges and Deposits (Cont'd)

(A) (Cont'd)

Such a deposit will be refunded or credited to the account when the customer has established credit or, in any event, after the customer has established a one-year prompt payment record at any time prior to the termination of the provision of the service to the customer. In case of a cash deposit, for the period the deposit is held by the Telephone Company, the customer will receive interest at the same percentage rate as that set forth in (B)(3)(b)(i) or in (B)(3)(b)(ii), whichever is lower. The rate will be compounded daily for the number of days from the date the customer deposit is received by the Telephone Company to and including the date such deposit is credited to the customer's account or the date the deposit is refunded by the Telephone Company. Should a deposit be credited to the customer's account, as indicated above, no interest will accrue on the deposit from the date such deposit is credited to the customer's account.

(B) The Telephone Company shall bill on a current basis all charges incurred by and credits due to the customer under this tariff attributable to services established or discontinued during the preceding billing period. In addition, the Telephone Company shall bill in advance charges for all services to be provided during the ensuing billing period except for charges associated with service usage and for the Federal Government which will be billed in arrears. The bill day (i.e., the billing date of a bill for a customer for Access Service under this tariff), the period of service each bill covers and the payment date will be as follows:

ACCESS SERVICE

2. General Regulations (Cont'd)

2.4 Payment Arrangements and Credit Allowances (Cont'd)

2.4.1 Payment of Rates, Charges and Deposits (Cont'd)

(B) (Cont'd)

(1) For End User Access Service and Presubscription Service, the Telephone Company will establish a bill day each month for each end user account or advise the customer in writing of an alternate billing schedule. Alternate billing schedules shall not be established on less than 60 days notice or initiated by the Telephone Company more than twice in any consecutive 12 month period. The bill will cover End User Access Service charges for the ensuing billing period except for End User Access Service for the Federal Government which will be billed in arrears. Any applicable Presubscription Charges, any known unbilled charges for prior periods and any known unbilled adjustments for prior periods for End User Access Service and Presubscription Service will be applied to this bill. Such bills are due when rendered.

(2) For Service other than End User Access Service and Presubscription Service, the Telephone Company will establish a bill day each month for each customer account or advise the customer in writing of an alternate billing schedule. Alternate billing schedules shall not be established on less than 60 days notice or initiated by the Telephone Company more than twice in any consecutive 12 month period. The bill will cover nonusage sensitive service charges for the ensuing billing period for which the bill is rendered, any known unbilled nonusage sensitive charges for prior periods and unbilled usage charges for the period after the last bill day through the current bill day. Any known unbilled usage charges for prior periods and any known unbilled adjustments will be applied to this bill. Payment for such bills is due as set forth in (3) following. If payment is not received by the payment date, as set forth in (3) following in immediately available funds, a late payment penalty will apply as set forth in (3) following.

ACCESS SERVICE

2. General Regulations (Cont'd)

2.4 Payment Arrangements and Credit Allowances (Cont'd)

2.4.1 Payment of Rates, Charges and Deposits (Cont'd)

(B) (Cont'd)

(3) (a) All bills dated as set forth in (2) preceding for service, other than End User Service and Presubscription Service, provided to the customer by the Telephone Company are due 31 days (payment date) after the bill day or by the next bill date (i.e., same date in the following month as the bill date), whichever is the shortest interval, except as provided herein, and are payable in immediately available funds. If such payment date would cause payment to be due on a Saturday, Sunday or Holiday (i.e., New Year's Day, Martin Luther King, Jr. Day, Independence Day, Labor Day, Thanksgiving Day, Christmas Day, the second Tuesday in November and a day when Washington's Birthday, Memorial Day or Columbus Day is legally observed), payment for such bills will be due from the customer as follows:

If such payment date falls on a Sunday or on a Holiday which is observed on a Monday, the payment date shall be the first non-Holiday day following such Sunday or Holiday. If such payment date falls on a Saturday or on a Holiday which is observed on Tuesday, Wednesday, Thursday or Friday, the payment date shall be the last non-Holiday day preceding such Saturday or Holiday.

ACCESS SERVICE

2. General Regulations (Cont'd)

2.4 Payment Arrangements and Credit Allowances (Cont'd)

2.4.1 Payment of Rates, Charges and Deposits (Cont'd)

(B) (Cont'd)

(3) (Cont'd)

(b) Further, if any portion of the payment is received by the Telephone Company after the payment date as set forth in (a) preceding, or if any portion of the payment is received by the Telephone Company in funds which are not immediately available to the Telephone Company, then a late payment penalty shall be due to the Telephone Company. The late payment penalty shall be the portion of the payment not received by the payment date times a late factor. The late factor shall be the lesser of:

(i) the highest interest rate (in decimal value) which may be levied by law for commercial transactions, compounded daily for the number of days from the payment date to and including the date that the IC actually makes the payment to the Telephone Company, or

(ii) 0.000590 per day, compounded daily for the number of days from the payment date to and including the date that the customer actually makes the payment to the Telephone Company.

(C) Customer shall be responsible for all costs, including attorney's fees, incurred in the collection of any unpaid charge or in any action to enforce payments and/or obligations arising under this tariff. (N) | | (N)

NOV - 9 2017
NPSC-Comm. Div.

2. General Regulations (Cont'd)

2.4 Payment Arrangements and Credit Allowances (Cont'd)

2.4.1 Payment of Rates, Charges and Deposits (Cont'd)

(B) (Cont'd)

(3) (Cont'd)

(c) Billing Disputes Resolved in Favor of the Telephone Company

Late payment charges will apply to amounts withheld pending settlement of the dispute. Late payment charges are calculated as set forth in (b) preceding except that when the customer disputes the bill on or before the payment date and pays the undisputed amount on or before the payment date, the penalty interest period shall not begin until 10 days following the payment date.

(d) Billing Disputes Resolved in Favor of the Customer

If the customer pays the total billed amount and disputes all or part of the amount, the Telephone Company will refund the overpayment. In addition, the Telephone Company will pay penalty interest to the customer if the dispute is not resolved within 10 days following the payment date. The penalty interest period shall begin 10 days following the payment date or on the date the disputed amount was actually paid, whichever is later. The penalty interest period shall end on the date that the Telephone Company actually refunds the overpayment to the customer. The penalty interest rate shall be the lesser of:

(i) the highest interest rate (in decimal value) which may be levied by law for commercial transactions, compounded daily for the number of days from the first date to and including the last date of the period involved, or

2. General Regulations (Cont'd)

2.4 Payment Arrangements and Credit Allowances (Cont'd)

2.4.1 Payment of Rates, Charges and Deposits (Cont'd)

(B) (Cont'd)

(3)(d)(Cont'd)

(ii) 0.000590 per day, compounded daily for the number of days from the first date to and including the last date of the period involved.

(C) When a payment for Access Service charges billed under this tariff is due to the Telephone Company from the customer as set forth in (B)(3)(a) preceding on the same payment date that a Purchase of Accounts Receivable net purchase amount is due to the customer from the Telephone Company, the Telephone Company may, with at least 31 days notice to the customer, net the payment for customer Access Service Charges with the net purchase amount. The Telephone Company will pay the net amount to the customer in funds which are immediately available on the payment date when such net amount is due to the customer or require the customer to pay to the Telephone Company in funds which are immediately available the net amount when such net amount is due to the Telephone Company. If either party does not make the payment on the payment date, a late payment penalty as set forth in (B)(3)(b) preceding applies.

(D) The Telephone Company will, upon request and if available, furnish such detailed information as may reasonably be required for verification of any bill. (C)

(E) When a rate as set forth in this tariff is shown to more than two decimal places, the charges will be determined using the rate shown. The resulting amount will then be rounded to the nearest penny (i.e., rounded to two decimal places).

JAN 2
NPSC-Comm.

2. General Regulations (Cont'd)

2.4 Payment Arrangements and Credit Allowances (Cont'd)

2.4.2 Minimum Periods

The minimum period for which services are provided and for which rates and charges are applicable is one month except for those services set forth in 5.2.5(B), 13.3.4(C)(1)(b) through (c) following and those usage-rated services set forth in Section 6 following.

The minimum period for which service is provided and for which rates and charges are applicable for a Specialized Service or Arrangement provided on an individual case basis as set forth in 12. following, is one month unless a different minimum period is established with the individual case filing.

When a service is discontinued prior to the expiration of the minimum period, charges are applicable, whether the services is used or not, as follows:

(A) When a service with a one month minimum period is discontinued prior to the expiration of the minimum period, a one month charge will apply at the rate level in effect at the time service is discontinued.

(B) When a service with a minimum period greater than one month is discontinued prior to the expiration of the minimum period, the applicable charge will be the lesser of (1) the Telephone Company's total nonrecoverable costs less the net salvage value for the discontinued service or (2) the total monthly charges, at the rate level in effect at the time service is discontinued, for the remainder of the minimum period.

2. General Regulations (Cont'd)

2.4 Payment Arrangements and Credit Allowances (Cont'd)

2.4.3 Cancellation of an Order for Service

Provisions for the cancellation of an order for service are set forth in other applicable sections of this tariff.

2.4.4 Credit Allowance for Service Interruptions

(A) General

A service is interrupted when it becomes unusable to the customer because of a failure of a facility component used to furnish service under this tariff, when the service is preempted as a result of invoking NSEP treatment, or in the event that the protective controls applied by the Telephone Company result in the complete loss of service by the customer as set forth in 6.5.1 following. An interruption period starts when an inoperative service is reported to the Telephone Company, and ends when the service is operative.

For purposes of administering the following regulations a major fraction shall mean more than half of the incremental credit period using the unit of time in which the service interruption is measured, i.e., 30 seconds, 1 minute, 1 hour. For example a major fraction for a 30 minute period equals 16 minutes for a 24 hour period equals 12 hours and one minute and for a 5 minute period equals 2 minutes and 31 seconds.

2. General Regulations (Cont'd)

2.4 Payment Arrangements and Credit Allowances (Cont'd)

2.4.4 Credit Allowance for Service Interruptions (Cont'd)

(B) When a Credit Allowance Applies

In case of an interruption to any service, allowance for the period of interruption, if not due to the negligence of the customer, shall be as follows:

(1) For Special Access Services other than Video Services and for flat-rated Switched Access Service rate elements, no credit shall be allowed for an interruption of less than 30 minutes. The customer shall be credited for an interruption of 30 minutes or more at the rate of 1/1440 of the monthly charges for the facility or service for each period of 30 minutes or major fraction thereof that the interruption continues.

The monthly charges used to determine the credit shall be as follows:

(a) For two-point services, the monthly charge shall be the total of all the monthly rate element charges associated with the service (i.e., two channel terminations, channel mileage and optional features and functions).

2. General Regulations (Cont'd)

2.4 Payment Arrangements and Credit Allowances (Cont'd)

2.4.4 Credit Allowance for Service Interruptions (Cont'd)

(B) When a Credit Allowance Applies (Cont'd)

(1) (Cont'd)

(b) For multipoint services, the monthly charge shall be only the total of all the monthly rate element charges associated with that portion of the service that is inoperative (i.e., a channel termination per customer premises, channel mileage and optional features and functions).

(c) For multiplexed services, the monthly charge shall be the total of all the monthly rate element charges associated with that portion of the service that is inoperative. When the facility which is multiplexed or the multiplexer itself is inoperative, the monthly charge shall be the total of all the monthly rate element charges associated with the service (i.e., the channel termination, channel mileage, entrance facility, direct-trunked transport, and optional features and functions, including the multiplexer on the facility to the hub, and the channel terminations, channel mileages and optional features and functions on the individual services from the hub). When the service which rides a channel of the multiplexed facility is inoperative, the monthly charge shall be the total of all the monthly rate element charges associated with that portion of the service from the hub to a customer premises (i.e., channel termination, channel mileage, direct-trunked transport, and optional features and functions).

(d) For flat-rated Switched Access Service rate elements, the monthly charge shall be the total of all the monthly rate element charges associated with the service (i.e., Entrance Facility, Direct-Trunked Transport and Multiplexing).

ACCESS SERVICE

2. General Regulations (Cont'd)

2.4 Payment Arrangements and Credit Allowances (Cont'd)

2.4.4 Credit Allowance for Service Interruptions (Cont'd)

(B) When a Credit Allowance Applies (Cont'd)

(2) For Video Special Access Services, no credit shall be allowed for an interruption of less than 30 seconds. The customer shall be credited for an interruption of 30 seconds or more as follows:

(a) For two-point services, when monthly rates are applicable, the credit shall be at the rate of 1/8640 of the monthly charges for the service for each period of 5 minutes or major fraction thereof that the interruption continues.

(b) For two-point services, when daily rates are applicable, the credit shall be at the rate of 1/288 of the daily charges for the service for each period of 5 minutes or major fraction thereof that the interruption continues.

(c) For multipoint services, when monthly rates are applicable, the credit shall be at the rate of 1/8640 of the monthly charges for each channel termination, channel mileage and optional features and functions that are inoperative for each period of 5 minutes or major fraction thereof that the interruption continues.

(d) For multipoint services, when daily rates are applicable, the credit shall be at the daily rate of 1/288 of the daily charges for channel termination, channel mileage and optional features and functions that are inoperative for each period of 5 minutes or major fraction thereof that the interruption continues.

ACCESS SERVICE

2. General Regulations (Cont'd)

2.4 Payment Arrangements and Credit Allowances (Cont'd)

2.4.4 Credit Allowance for Service Interruptions (Cont'd)

(B) When a Credit Allowance Applies (Cont'd)

(2) (Cont'd)

(e) For multipoint services, the credit for the monthly or daily charges includes the charges for the distribution amplifier only when the distribution amplifier is inoperative.

(f) When two or more interruptions occur during a period of 5 consecutive minutes, such multiple interruptions shall be considered as one interruption.

(3) For Switched Access Service usage-rated elements, no credit shall be allowed for an interruption of less than 24 hours. The customer shall be credited for an interruption of 24 hours or more at the rate of 1/30 of any applicable monthly rate or applicable minimum monthly usage charge for each period of 24 hours or major fraction thereof that the interruption continues.

ACCESS SERVICE

2. General Regulations (Cont'd)

2.4 Payment Arrangements and Credit Allowances (Cont'd)

2.4.4 Credit Allowance for Service Interruptions (Cont'd)

(B) When a Credit Allowance Applies (Cont'd)

(4) The credit allowance(s) for an interruption or for a series of interruptions shall not exceed any monthly rate or minimum monthly usage charge for the service interrupted in any one monthly billing period.

(5) For certain Special Access services (Digital Data Access, D1 through D6; and High Capacity, HC1), any period during which the error performance is below that specified for the service will be considered as an interruption.

(6) Service interruptions for Specialized Service or Arrangements provided under the provisions of 12. following shall be administered in the same manner as those set forth in this section (2.4.4) unless other regulations are specified with the individual case filing.

ACCESS SERVICE

2. General Regulations (Cont'd)

2.4 Payment Arrangements and Credit Allowances (Cont'd)

2.4.4 Credit Allowance for Service Interruptions (Cont'd)

(C) When a Credit Allowance Does Not Apply

No credit allowance will be made for:

(1) Interruptions caused by the negligence of the customer.

(2) Interruptions of a service due to the failure of equipment or systems provided by the customer or others.

(3) Interruptions of a service during any period in which the Telephone Company is not afforded access to the premises where the service is terminated.

(4) Interruptions of a service when the customer has released that service to the Telephone Company for maintenance purposes, to make rearrangements, or for the implementation of an order for a change in the service during the time that was negotiated with the customer prior to the release of that service. Thereafter, a credit allowance as set forth in (B) preceding applies.

(5) Interruptions of a service which continue because of the failure of the customer to authorize replacement of any element of special construction, as set forth in Windstream Nebraska, Inc., TARIFF F.C.C. No. 3 for SPECIAL CONSTRUCTION. The period for which no credit allowance is made begins on the seventh day after the customer receives the Telephone Company's written notification of the need for such replacement and ends on the day after receipt by the Telephone Company of the customer's written authorization for such replacement.

2. General Regulations (Cont'd)

2.4 Payment Arrangements and Credit Allowances (Cont'd)

2.4.4 Credit Allowance for Service Interruptions (Cont'd)

(C) When a Credit Allowance Does Not Apply (Cont'd)

(6) Periods when the customer elects not to release the service for testing and/or repair and continues to use it on an impaired basis.

(7) An interruption or a group of interruptions, resulting from a common cause, for amounts less than one dollar.

(D) Use of an Alternative Service Provided by the Telephone Company

Should the customer elect to use an alternative service provided by the Telephone Company during the period that a service is interrupted, the customer must pay the tariffed rates and charges for the alternative service used.

(E) Temporary Surrender of a Service

In certain instances, the customer may be requested by the Telephone Company to surrender a service for purposes other than maintenance, testing or activity relating to a service order. If the customer consents, or in the instance of preemption under NSEP treatment as set forth in 2.1.13 preceding, a credit allowance will be granted. The credit allowance will be 1/1440 of the monthly rate for each period of 30 minutes or fraction thereof that the service is surrendered. In no case will the credit allowance exceed the monthly rate for the service surrendered in any one monthly billing period.

ACCESS SERVICE

2. General Regulations (Cont'd)

2.4 Payment Arrangements and Credit Allowances (Cont'd)

2.4.5 Re-establishment of Service Following Fire, Flood or Other Occurrence

(A) Nonrecurring Charges Do Not Apply

Charges do not apply for the re-establishment of service following a fire, flood or other occurrence attributed to an Act of God provided that:

(1) The service is of the same type as was provided prior to the fire, flood or other occurrence.

(2) The service is for the same customer.

(3) The service is at the same location on the same premises.

(4) The re-establishment of service begins within 60 days after Telephone Company service is available. (The 60 day period may be extended a reasonable period if the renovation of the original location on the premises affected is not practical within the allotted time period).

(B) Nonrecurring Charges Apply

Nonrecurring Charges apply for establishing service at a different location on the same premises or at a different premises pending re-establishment of service at the original location.

2. General Regulations (Cont'd)

2.4 Payment Arrangements and Credit Allowances (Cont'd)

2.4.6 Title or Ownership Rights

(A) The payment of rates and charges by customers for the services offered under the provisions of this tariff does not assign, confer or transfer title or ownership rights to proposals or facilities developed or utilized, respectively, by the Telephone Company in the provision of such services.

2.4.7 Access Services Provided By More Than One Telephone Company

(A) When an Access Service is provided by more than one Telephone Company, the Telephone Companies involved will mutually agree upon one of the billing methods as set forth in (1) and (2) following based upon the interconnection arrangements between the Telephone Companies and the availability of measurement capability and the type of service provided. The Telephone Company shall provide notice in writing 30 days in advance of any changes to these billing methods. For Feature Group A the single company billing method would apply and for Feature Groups B, C, and D and Special Access Service, the multiple company billing method applies.

The billing methods for FGA, FGB, FGC, FGD, and Special Access will be in accordance with the MECAB and MECOD standards accepted by the Commission in the FCC Order in CC Docket No. 87-579, Phase II, dated September 28, 1988.

The customer will place the order for the service as set forth in 5.2.8 dependent upon the billing method. The Telephone Company receiving the order or copy of the order from the customer will be responsible for billing the customer.

(1) Single Company Billing:

(a) The Telephone Company receiving the order from the customer, as specified in 5.2.8(A)(1), will arrange to provide the service, determine the applicable charges and bill the customer for the entire service in accordance with its Access Services tariff. All other telephone companies are precluded from billing for the service.

ACCESS SERVICE

2. General Regulations (Cont'd)

2.4 Payment Arrangements and Credit Allowances (Cont'd)

2.4.7 Access Services Provided By More Than One Telephone Company (Cont'd)

(A) (Cont'd)

(2) Multiple Company (Interconnection Point) Billing:

(a) Each Telephone Company receiving an order or copy of the order from the customer, as specified in 5.2.8(A)(2) following will determine the applicable charges for the portion of the service it provides and bill in accordance with its Access Services tariff as follows:

(i) Determine the appropriate Local Transport or Channel Mileage by computing the number of airline miles between the Telephone Company premises (end office, access tandem or serving wire centers for Switched Access or serving wire centers for Special Access) using the V & H method set forth in 6.7.12 and 7.2.4.

(ii) Determine the billing percentage (BP), as set forth in EXCHANGE CARRIER ASSOCIATION TARIFF F.C.C. NO. 4, which rep resents the portion of the service provided by each Telephone Company;

2. General Regulations (Cont'd)

2.4 Payment Arrangements and Credit Allowances (Cont'd)

2.4.7 Access Services Provided by More Than One Telephone Company (Cont'd)

(A) (Cont'd)

(2) (Cont'd)

(a) (Cont'd)

(iii) For Feature Groups B, C and D Tandem-Switched Transport:

- Multiply the number of originating and terminating access minutes of use routed over the facility times the number of airline miles, as set forth in (i) preceding, times the BP for each Telephone Company, as set forth in (ii) preceding, times the Tandem-Switched Facility rate.

- Multiply the Tandem-Switched Termination rate times the number of originating and terminating access minutes routed over the facility, then divide by 2.

- Multiply the Tandem-Switching Charge rate times the number of originating and terminating access minutes that are switched at the tandem.

2. General Regulations (Cont'd)

2.4 Payment Arrangements and Credit Allowances (Cont'd)

2.4.7 Access Services Provided by More Than One Telephone Company (Cont'd)

(A) (Cont'd)

(2) (Cont'd)

(a) (Cont'd)

(iv) For Feature Groups B, C and D Direct-Trunked Transport:

- Multiply the number of airline miles, as set forth in (i) preceding, times the BP for each Telephone Company, as set forth in (ii) preceding, times the Direct-Trunked Facility rate.

- The Direct-Trunked Termination rate is applied as set forth in 6.8.1 following. (Note: The BP is not applied to the Switched Access Direct-Trunked Termination rate.)

(v) For Feature Groups B, C and D:

- Multiply the Residual Interconnection Charge (RIC) rate times the number of originating and terminating access minutes that are switched at the end office. The company that owns the end office is the only company that bills the RIC.

- The Entrance Facility rate and the Multiplexing rate are applied as set forth in 6.8.1 following.

- The Billing Percentage (BP) is not applicable to the Residual Interconnection Charge, Entrance Facility or Multiplexing.

2. General Regulations (Cont'd)

2.4 Payment Arrangements and Credit Allowances (Cont'd)

2.4.7 Access Services Provided by More Than One Telephone Company (Cont'd)

(A) (Cont'd)

(2) (Cont'd)

(a) (Cont'd)

(vi) For Special Access using BP method, multiply the number of airline miles, as set forth in (i) preceding, times the BP for each Telephone Company, as set forth in (ii) preceding, times the Channel Mileage Facility rate. Add the Channel Mileage Termination rate.

(vii) When three or more Telephone Companies are involved in providing an Access Service, the intermediate Telephone Company(s) will determine the appropriate charges as set forth in (iii) and (vi) preceding, except the Channel Mileage Termination rate does not apply at the intermediate Telephone Company(s) offices.

(b) All other appropriate recurring and nonrecurring charges in each Telephone Company's tariff are applicable.

2. General Regulations (Cont'd)

2.5 Connections

2.5.1 General

Equipment and Systems (i.e., terminal equipment, multiline terminating systems and communications systems) may be connected with Switched and Special Access Service furnished by the Telephone Company where such connection is made in accordance with the provisions specified in Technical Reference Publication AS No. 1 and in 2.1 preceding.

2. General Regulations

2.6 Definitions

Certain terms used herein are defined as follows:

Access Code

The term "Access Code" denotes a uniform seven digit code assigned by the Telephone Company to an individual customer. The seven digit code has the form 101XXXX and 950-10XX.

Access Minutes

The term "Access Minutes" denotes that usage of exchange facilities in intrastate service for the purpose of calculating chargeable usage. On the originating end of an intrastate call, usage is measured from the time the originating end user's call is delivered by the Telephone Company to and acknowledged as received by the customer's facilities connected with the originating exchange. On the terminating end of an intrastate call, usage is measured from the time the call is received by the end user in the terminating exchange. Timing of usage at both originating and terminating ends of an intrastate call shall terminate when the calling or called party disconnects, whichever event is recognized first in the originating and terminating exchanges, as applicable.

Access Tandem

The term "Access Tandem" denotes a Telephone Company switching system that provides a concentration and distribution function for originating or terminating traffic between end offices and a customer's premises.

Alternate Tandem Switching Provider (ATSP)

The term "Alternate Tandem Switching Provider (ATSP)" denotes any interested third party opting to receive CIC and OZZ Signaling Information from the Telephone Company equal access end office(s) so that this third party can offer tandem switching functions.

Answer/Disconnect Supervision

The term "Answer/Disconnect Supervision" denotes the transmission of the switch trunk equipment supervisory signal (off-hook or on-hook) to the customer's point of termination as an indication that the called party has answered or disconnected.

2. General Regulations (Cont'd)

2.6 Definitions (Cont'd)

Attenuation Distortion

The term "Attenuation Distortion" denotes the difference in loss at specified frequencies relative to the loss at 1004 Hz, unless otherwise specified.

Balance (100 Type) Test Line

The term "Balance (100 Type) Test Line" denotes an arrangement in an end office which provides for balance and noise testing.

Billing Name and Address

The term "Billing Name and Address" denotes the name and address provided to a local exchange company by each of its local exchange customers to which the local exchange company directs bills for its services.

Bit

The term "Bit" denotes the smallest unit of information in the binary system of notation.

2. General Regulations (Cont'd)

2.6 Definitions (Cont'd)

Business Day

The term "Business Day" denotes the times of day that a company is open for business. Generally, in the business community, these are 8:00 or 9:00 A.M. to 5:00 or 6:00 P.M., respectively, with an hour for lunch, Monday through Friday, resulting in a standard forty (40) hour work week. However, Business Day hours for the Telephone Company may vary based on company policy, union contract and location. To determine such hours for an individual company, or company location, that company should be contacted at the address shown at the bottom of this page.

Busy Hour Minutes of Capacity (BHMC)

The term "Busy Hour Minutes of Capacity (BHMC)" denotes the customer specified maximum amount of Switched Access Service and/or Directory Assistance Service access minutes the customer expects to be handled in an end office switch during any hour in an 8:00 A.M. to 11:00 P.M. period for the Feature Group and/or Directory Assistance Service ordered. This customer furnished BHMC quantity is the input data the Telephone Company uses to determine the number of transmission paths for the Feature Group and/or Directory Assistance Service ordered.

Call

The term "Call" denotes a customer attempt for which the complete address code (e.g., 0-, 911, or 10 digits) is provided to the serving dial tone office.

Carrier Identification Code (CIC)

The term "Carrier Identification Code (CIC)" denotes the caller's interexchange carrier to which the traffic should be directed.

2. General Regulations (Cont'd)

2.6 Definitions (Cont'd)

Carrier or Common Carrier

See Interexchange Carrier

CCS

The term "CCS" denotes a hundred call seconds, which is a standard unit of traffic load that is equal to 100 seconds of usage or capacity of a group of servers (e.g., trunks).

Central Office

The term "Central Office" denotes a local Telephone Company switching system where Telephone Exchange Service customer station loops are terminated for purposes of interconnection to each other and to trunks.

Central Office Equipment Technician

The term "Central Office Equipment Technician" denotes a Telephone Company employee who performs installation and/or repair work including testing and trouble isolation, within the Telephone Company Central Office. Included in this category would be Toll Radio Technician, Test Technician, and Toll Terminal Technician.

Central Office Prefix

The term "Central Office Prefix" denotes the first three digits (NXX) of the seven digit telephone number assigned to a customer's Telephone Exchange Service when dialed on a local basis.

2. General Regulations (Cont'd)

2.6 Definitions (Cont'd)

Centralized Automatic Reporting on Trunks Testing

The term "Centralized Automatic Reporting on Trunks Testing" denotes a type of testing which includes the capacity for measuring operational and transmission parameters.

Channel(s)

The term "Channel(s)" denotes an electrical or photonic, in the case of fiber optic-based transmission systems, communications path between two or more points of termination.

Channel Service Unit

The term "Channel Service Unit" denotes equipment which performs one or more of the following functions: termination of a digital facility, regeneration of digital signals, detection and/or correction of signal format error, and remote loop back.

Channelize

The term "Channelize" denotes the process of multiplexing- demultiplexing wider bandwidth or higher speed channels into narrower band-width or lower speed channels.

Clear Channel Capability

The term "Clear Channel Capability" denotes the ability to transport twenty-four 64 Kbps over a DS1 Mbps High Capacity service via a B8ZS line code format.

C-Message Noise

The term "C-Message Noise" denotes the frequency weighted average noise within an idle voice channel. The frequency weighting, called C-message, is used to simulate the frequency characteristic of the 500-type telephone set and the hearing of the average subscriber.

2. General Regulations (Cont'd)

2.6 Definitions (Cont'd)

C-Notched Noise

The term "C-Notched Noise" denotes the C-message frequency weighted noise on a voice channel with a holding tone, which is removed at the measuring end through a notch (very narrow band) filter.

Coin Station

The term "Coin Station" denotes a location where Telephone Company equipment is provided in a public or semipublic place where Telephone Company customers can originate telephonic communications and pay the applicable charges by inserting coins into the equipment.

Common Channel Signaling

The term "Common Channel Signaling" (CCS) denotes a high speed packet switched communications network which is separate (out of band) from the public packet switched and message networks. Its purpose is to carry addressed signaling messages for individual trunk circuits and/or database related services between Signaling Points in the CCS network.

2. General Regulations (Cont'd)

2.6 Definitions (Cont'd)

Common Line

The term "Common Line" denotes a line, trunk, pay telephone line or other facility provided under the general and/or local exchange service tariffs of the Telephone Company, terminated on a central office switch. A common line-residence is a line or trunk provided under the residence regulations of the general and/or local exchange service tariffs. A common line-business is a line provided under the business regulations of the general and/or local exchange service tariffs.

Communications System

The term "Communications System" denotes channels and other facilities which are capable of communications between terminal equipment provided by other than the Telephone Company.

Customer(s)

The term "Customer(s)" denotes any individual, partnership, association, joint-stock company, trust, corporation, or governmental entity or other entity which subscribes to the services offered under this tariff, including but not limited to Interexchange Carriers (ICs), End Users and other telecommunications carriers or providers originating or terminating toll VoIP-PSTN traffic. (C)

Customer Designated Premises

The term "Customer Designated Premises" denotes the premises specified by the customer for the provision of Access Service.

RECEIVED
DEC 20 2011
NPSC-Comm. Dept.

2. General Regulations (Cont'd)

2.6 Definitions (Cont'd)

Customer Message

The term "Customer Message" used herein for Feature Group A Switched Access Service denotes a completed call over an intrastate Feature Group A Switched Access Service. A completed call includes both completed calls originated to and terminated from a Feature Group A Switched Access Service. A customer message begins in the originating direction when the off-hook supervision provided by the premise of the ordering customer is received by Telephone Company recording equipment. A customer message begins in the terminating direction when answer supervision is received by Telephone Company recording equipment indicating the called party has answered. A customer message ends in the originating direction when disconnect supervision is received by Telephone Company recording equipment from the premise of the ordering customer. A customer message ends in the terminating direction when disconnect supervision is received by Telephone Company recording equipment from either the premise of the ordering customer or the called party.

The term "Customer Message" used herein for Feature Group C and D Switched Access Service denotes a completed intrastate call originated by a customer's end user. A customer message begins when answer supervision from the premise of the ordering customer is received by Telephone Company recording equipment indicating that the called party has answered. A message ends when disconnect supervision is received by Telephone Company recording equipment from either the premise of the ordering customer or the customer's end user premise from which the call originated.

Customer of Record

The term "Customer of Record" denotes the entity who is ultimately responsible for all aspects of the service.

DACS

The term "DACS" (Digital Access and Crossconnect System) is a computer controlled time slot interchange used to interconnect signals at the DS0 level.

Data Transmission (107 Type) Test Line

The term "Data Transmission (107 Type) Test Line" denotes an arrangement which provides for a connection to a signal source which provides test signals for one-way testing of data and voice transmission parameters.

Decibel

The term "Decibel" denotes a unit used to express relative difference in power, usually between acoustic or electric signals, equal to ten (10) times the common logarithm of the ratio of two signal powers.

2. General Regulations (Cont'd)

2.6 Definitions (Cont'd)

Decibel Reference Noise C-Message Weighting

The term "Decibel Reference Noise C-Message Weighting" denotes noise power measurements with C-Message Weighting in decibels relative to a reference 1000 Hz tone of 90 dB below 1 milliwatt.

Decibel Reference Noise C-Message Referenced to 0

The term "Decibel Reference Noise C-Message Referenced to 0" denotes noise power in "Decibel Reference Noise C-Message Weighting" referred to or measured at a zero transmission level point.

Density Pricing Zone

The term "Density Pricing Zone" denotes the group of serving wire centers to which a serving wire center has been assigned for traffic density-related pricing of specific access services. Serving wire centers are assigned to a zone based upon traffic density. The rate for a specific service may differ between zones.

Detail Billing

The term "Detail Billing" denotes the listing of each message and/or rate element for which charges to a customer are due on a bill prepared by the Telephone Company.

Digital End Office

The term "Digital End Office" defines the wire center that interconnects local digital service elements or passes on service to digital hubs when required for functional support.

Digital Hub

"Digital Hub" denotes the wire center that has facilities for bridging and subrate multiplexing.

Digital Switched 56 Service

A switched access optional feature available with Feature Group D Access, which provides for data transmission at up to 56 Kilobits per second.

Direct-Trunked Transport

The term "Direct-Trunked Transport" denotes transport from the serving wire center (SWC) to the end office (EO) or from the SWC to the access tandem on circuits dedicated to the use of a single customer without switching at the tandem.

DS0

The term "DS0" is a 64 k/b signal format used to crossconnect in wire centers.

2. General Regulations (Cont'd)

2.6 Definitions (Cont'd)

DS0-A

"DS0-A" is a DS0 signal designated to carry data for only one station.

DS0-B

"DS0-B" is a DS0 signal designated to carry data for multiple stations.

Dual Tone Multifrequency Address Signaling

The term "Dual Tone Multifrequency Address Signaling" denotes a type of signaling that is an optional feature of Switched Access Feature Group A. It may be utilized when Feature Group A is being used in the terminating direction (from the point of termination with the customer to the local exchange end office). An office arranged for Dual Tone Multifrequency Signaling would expect to receive address signals from the customer in the form of Dual Tone Multifrequency signals.

Echo Control

The term "Echo Control" denotes the control of reflected signals in a telephone transmission path.

Echo Path Loss

The term "Echo Path Loss" denotes the measure of reflected signal at a 4-wire point of interface without regard to the send and receive Transmission Level Point.

Echo Return Loss

The term "Echo Return Loss" denotes a frequency weighted measure of return loss over the middle of the voiceband (approximately 500 to 2500 Hz), where talker echo is most annoying.

2. General Regulations (Cont'd)

2.6 Definitions (Cont'd)

Effective 2-Wire

The term "Effective 2-Wire" denotes a condition which permits the simultaneous transmission in both directions over a channel, but it is not possible to insure independent information transmission in both directions. Effective 2-wire channels may be terminated with 2-wire or 4-wire interfaces.

Effective 4-Wire

The term "Effective 4-Wire" denotes a condition which permits the simultaneous independent transmission of information in both directions over a channel. The method of implementing effective 4-wire transmission is at the discretion of the Telephone Company (physical, time domain, frequency-domain separation or echo cancellation techniques). Effective 4-wire channels may be terminated with a 2-wire interface at the customer's premises. However, when terminated 2-wire, simultaneous independent transmission cannot be supported because the two wire interface combines the transmission paths into a single path.

8XX

The term "8XX" denotes the toll free Service Access Codes (SAC). Along with the current toll free 800 and 888 SAC, 822, 833, 844, 855, 866 and 877 SACs have been reserved by the telecommunications industry for the expansion of toll free access service.

2. General Regulations (Cont'd)

2.6 Definitions (Cont'd)

End Office Switch

The term "End Office Switch" denotes a local Telephone Company switching system where Telephone Exchange Service customer station loops are terminated for purposes of interconnection to trunks. Included are Remote Switching Modules and Remote Switching Systems served by a Host Central Office in a different wire center.

End User

The term "End User" means any customer of an intrastate telecommunications service that is not a carrier, except that a carrier other than a telephone company shall be deemed to be an "end user" when such carrier uses a telecommunications service for administrative purposes, and a person or entity that offers telecommunications service exclusively as a reseller shall be deemed to be an "end user" if all resale transmissions offered by such reseller originate on the premises of such reseller.

Entrance Facilities

The term "Entrance Facilities" denotes Switched Access Service dedicated transport from the customer's point of demarcation to the serving wire center.

Entry Switch

See First Point of Switching

2. General Regulations (Cont'd)

2.6 Definitions (Cont'd)

Envelope Delay Distortion

The term "Envelope Delay Distortion"denotes a measure of the linearity of the phase versus frequency of a channel.

Equal Level Echo Path Loss

The term "Equal Level Echo Path Loss" (ELEPL) denotes the measure of Echo Path Loss (EPL) at a 4-wire interface which is corrected by the difference between the send and receive Transmission Level Point (TLP). [ELEPL = EPL - TLP (send) + TLP (receive)]

Exchange

The term "Exchange" denotes a unit generally smaller than a local access and transport area, established by the Telephone Company for the administration of communications service in a specified area which usually embraces a city, town or village and its environs. It consists of one or more central offices together with the associated facilities used in furnishing communications service within that area. The exchange includes any Extended Area Service area that is an enlargement of a Telephone Company's exchange area to include nearby exchanges. One or more designated exchanges comprise a given local access and transport area.

Exit Message

The term "Exit Message" denotes an SS7 message sent to an end office by the Telephone Company's tandem switch to mark the Carrier Connect Time when the Telephone Company's tandem switch sends an Initial Address Message to an interexchange customer.

Expected Measured Loss

The term "Expected Measured Loss" denotes a calculated loss which specifies the end-to-end 1004-Hz loss on a terminated test connection between two readily accessible manual or remote test points. It is the sum of the inserted connection loss and test access loss including any test pads.

Extended Area Service

(See Definition of Exchange.)

2. General Regulations (Cont'd)

2.6 Definitions (Cont'd)

Field Identifier

The term "Field Identifier" denotes two to four characters that are used on service orders to convey specific instructions. Field Identifiers may or may not have associated data. Selected Field Identifiers are used in Telephone Company billing systems to generate nonrecurring charges.

First Point of Switching

The term "First Point of Switching" denotes the first Telephone Company location at which switching occurs on the terminating path of a call proceeding from the customer premises to the terminating end office and, at the same time, the last Telephone Company location at which switching occurs on the originating path of a call proceeding from the originating end office to the customer premises.

Frequency Shift

The term "Frequency Shift" denotes the change in the frequency of a tone as it is transmitted over a channel.

Grandfathered

The term "Grandfathered" denotes Terminal Equipment, Multiline Terminating Systems and Protective Circuitry directly connected to the facilities utilized to provide services under the provisions of this tariff, and which are considered grandfathered under Part 68 of the F.C.C.'s Rules and Regulations.

Host Central Office

The term "Host Central Office" denotes an electronic switching unit containing the central call processing functions which service the Host Central Office and its Remote Switching Systems or Remote Switching Modules.

Host Office

The term "Host Office" denotes an electronic switching system which provides call processing capabilities for one or more Remote Switching Modules or Remote Switching Systems.

2. General Regulations (Cont'd)

2.6 Definitions (Cont'd)

Hub Location

The term "Hub Location" denotes a Telephone Company designated serving Wire Center at which bridging or multiplexing functions are performed.

Hunt Group Arrangement

The term "Hunt Group Arrangement" denotes the ability to sequentially access one of two or more line side connections in the originating direction, when the access code of the line group is dialed.

Immediately Available Funds

The term "Immediately Available Funds" denotes a corporate or personal check drawn on a bank account and funds which are available for use by the receiving party on the same day on which they are received and include U.S. Federal Reserve bank wire transfers, U.S. Federal Reserve notes (paper cash), U.S. coins, U.S. Postal Money Orders and New York Certificates of Deposit.

Impedance Balance

The term "Impedance Balance" denotes the method of expressing Echo Return Loss and Singing Return Loss at a 4-wire interface whereby the gains and/or loss of the 4-wire portion of the transmission path, including the hybrid, are not included in the specification.

2. General Regulations (Cont'd)

2.6 Definitions (Cont'd)

Impulse Noise

The term "Impulse Noise" denotes any momentary occurrence of the noise on a channel over a specified level threshold. It is evaluated by counting the number of occurrences which exceed the threshold.

Individual Case Basis

The term "Individual Case Basis" denotes a condition in which the regulations, if applicable, rates and charges for an offering under the provisions of this tariff are developed based on the circumstances in each case.

Initial Address Message

The term "Initial Address Message" denotes an SS7 message sent in the forward direction to initiate trunk set up, reserve an outgoing trunk and process the information about that trunk along with other data relating to the routing and handling of the call to the next switch.

Inserted Connection Loss

The term "Inserted Connection Loss" denotes the 1004 Hz power difference (in dB) between the maximum power available at the originating end and the actual power reaching the terminating end through the inserted connection.

Installation and Repair Technician

The term "Installation and Repair Technician" denotes a Telephone Company employee who performs installation and/or repair work, including testing and trouble isolation, outside of the Telephone Company Central Office and generally at the customer's designated premises. Included in this category would be Toll Radio Tech., Special Services Tech., Teletype Tech., and Combination Tech.

Interexchange Carrier (IC) or Interexchange Common Carrier

The terms "Interexchange Carrier" (IC) or "Interexchange Common Carrier" denotes any individual, partnership, association, joint-stock company, trust, governmental entity or corporation engaged for hire in intrastate communication by wire or radio, between two or more exchanges.

2. General Regulations (Cont'd)

2.6 Definitions (Cont'd)

Intermodulation Distortion

The term "Intermodulation Distortion" denotes a measure of the nonlinearity of a channel. It is measured using four tones, and evaluating the ratios (in dB) of the transmitted composite four-tone signal power to the second-order products of the tones (R2), and the third-order products of the tones (R3).

Interstate Communications

The term "Interstate Communications" denotes both interstate and foreign communications.

Intrastate Communications

The term "Intrastate Communications" denotes any communications within a state subject to oversight by state regulatory commission as provided by the laws of the state involved.

2. General Regulations (Cont'd)

2.6 Definitions (Cont'd)

Line Side Connection

The term "Line Side Connection" denotes a connection of a transmission path to the line side of a local exchange switching system.

Local Access and Transport Area

The term "Local Access and Transport Area" denotes a geographic area established for the provision and administration of communications service. It encompasses one or more designated exchanges, which are grouped to serve common social, economic and other purposes.

Local Calling Area

The term "Local Calling Area" denotes the area within which customers, connected to a particular exchange including EAS, may make telephone calls without incurring toll charges. Each Local Calling Area is as defined in the Telephone Company's general and/or local exchange service tariff.

Local Tandem Switch

The term "Local Tandem Switch" denotes a local Telephone Company switching unit by which local or access telephonic communications are switched to and from an End Office Switch.

Loop Around Test Line

The term "Loop Around Test Line" denotes an arrangement utilizing a Telephone Company central office to provide a means to make certain two-way transmission tests on a manual basis. This arrangement has two central office terminations, each reached by means of separate telephone numbers and does not require any specific customer premises equipment. Equipment subject to this test arrangement is at the discretion of the customer.

2. General Regulations (Cont'd)

2.6 Definitions (Cont'd)

Loss Deviation

The term "Loss Deviation" denotes the variation of the actual loss from the designed value.

Message

The term "Message" denotes a "call" as defined preceding.

Milliwatt (102 Type) Test Line

The term "Milliwatt (102 Type) Test Line" denotes an arrangement in an end office which provides a 1004 Hz tone at 0 dBm0 for one-way transmission measurements towards the customer's premises from the Telephone Company end office.

Multifrequency (MF) Address Signaling

The term "Multifrequency (MF) Address Signaling" denotes a signaling method in which a combination of two out of six voiceband frequencies are used to represent a digit or a control signal.

Multiplexing

The term "Multiplexing" involves a system by which several individual information-carrying channels are combined for transmission over one bearer (line, fiber or radio).

Multipoint Service

The term "Multipoint Service" denotes a service which provides communications capability between more than two locations by means of a bridging or hubbing arrangement.

2. General Regulations (Cont'd)

2.6 Definitions (Cont'd)

National Security Emergency Preparedness (NSEP) Services

The term "National Security Emergency Preparedness (NSEP) Services" denotes telecommunications services which are used to maintain a state of readiness or to respond to and manage any event or crises (local, national or international), which causes or could cause injury or harm to the population, damage to or loss of property, or degrades or threatens the NSEP posture of the United States.

Network Control Signaling

The term "Network Control Signaling" denotes the transmission of signals used in the telecommunications system which perform functions such as supervision (control, status, and charge signals), address signaling (e.g., dialing), calling and called number identifications, rate of flow, service selection error control and audible tone signals (call progress signals indicating re-order or busy conditions, alerting, coin denominations, coin collect and coin return tones) to control the operation of the telecommunications system.

Nonsynchronous Test Line

The term "Nonsynchronous Test Line" denotes an arrangement in step-by-step end offices which provides operational tests which are not as complete as those provided by the synchronous test lines, but can be made more rapidly.

North American Numbering Plan

The term "North American Numbering Plan" denotes a three-digit area (Numbering Plan Area) code and a seven-digit telephone number made up of a three-digit Central Office code plus a four-digit station number.

NSEP Treatment

The term "NSEP Treatment" denotes the provisioning of a telecommunications service before others based on the provisioning priority level assigned by the Executive Office of the President.

2. General Regulations (Cont'd)

2.6 Definitions (Cont'd)

Off-hook

The term "Off-hook" denotes the active condition of Switched Access or a Telephone Exchange Service line.

On-Hook

The term "On-hook" denotes the idle condition of Switched Access or a Telephone Exchange Service line.

Open Circuit Test Line

The term "Open Circuit Test Line" denotes an arrangement in an end office which provides an ac open circuit termination of a trunk or line by means of an inductor of several Henries.

Originating Direction

The term "Originating Direction" denotes the use of access service for the origination of calls from an End User Premises to an IC Premises.

OZZ Digits

The term "OZZ Digits" denotes the domestic call type (e.g., 1+) and thus the specific trunk group onto which a particular call should be routed.

Pay Telephone

The term "Pay Telephone" denotes Telephone Company provided instruments and related facilities that are available to the general public for public convenience and necessity, including public and semipublic telephones, and coinless telephones.

Phase Jitter

The term "Phase Jitter" denotes the unwanted phase variations of a signal.

Point of Termination

The term "Point of Termination" denotes the point of demarcation within a customer-designated premises at which the Telephone Company's responsibility for the provision of Access Service ends.

2. General Regulations (Cont'd)

2.6 Definitions (Cont'd)

Premises

The term "Premises" denotes a building or buildings on continuous property (except Railroad Right-of-Way, etc.) not separated by a public highway.

Query

The term "Query" denotes the inquiry to a data base to obtain information, processing instructions or service data.

Rate Zone

See Density Pricing Zone.

Registered Equipment

The term "Registered Equipment" denotes the customer's premises equipment which complies with and has been approved within the Registration Provisions of Part 68 of the F.C.C.'s Rules and Regulations.

Release Message

The term "Release Message" denotes an SS7 Message sent in either direction to indicate that a specific circuit is being released.

Remote Switching Modules

The term "Remote Switching Modules and/or Remote Switching Systems" denotes small, remotely controlled electronic end office switches which obtain their call processing capability from an ESS-type Host Office. The Remote Switching Modules and/or Remote Switching Systems cannot accommodate direct trunks to an IC.

Return Loss

The term "Return Loss" denotes a measure of the similarity between the two impedances at the junction of two transmission paths. The higher the return loss, the higher the similarity.

Secondary Channel

The term "Secondary Channel" denotes the offering of a companion digital transmission capability over the same physical facility as the primary channel at a lower bit rate. Terminal equipment required to support secondary channel must be provided by the customer.

2. General Regulations (Cont'd)

2.6 Definitions (Cont'd)

Service Access Code (SAC)

The term "Service Access Code" denotes a 3 digit code in the NPA format which is used as the first three digits of a 10 digit address and which is assigned for special network uses. Whereas NPA codes are normally used for identifying specific geographical areas, certain Service Access Codes have been allocated in the North American Numbering Plan to identify generic services or to provide access capability. Examples of Service Access Codes include the 500, 700, 800 and 900 codes.

Service Switching Point (SSP)

A Service Switching Point denotes an end office or tandem which, in addition to having SS7 and SP capabilities, is also equipped to query centralized data bases.

Serving Wire Center

The term "Serving Wire Center" denotes the wire center from which the customer designated premises would normally obtain dial tone from the Telephone Company.

Seven Digit Manual Test Line

The term "Seven Digit Manual Test Line" denotes an arrangement which allows the Customer to select balance, milliwatt and synchronous test lines by manually dialing a seven digit number over the associated access connection.

Shortage of Facilities or Equipment

The term "Shortage of Facilities or Equipment" denotes a condition which occurs when the Telephone Company does not have appropriate cable, switching capacity, bridging or, multiplexing equipment, etc., necessary to provide the Access service requested by the customer.

Short Circuit Test Line

The term "Short Circuit Test Line" denotes an arrangement in an end office which provides for an ac short circuit termination of a trunk or line by means of a capacitor of at least four microfarads.

Signal-to-C-Notched Noise Ratio

The term "Signal-to-C-Notched Noise Ratio" denotes the ratio in dB of a test signal to the corresponding C-Notched Noise.

2. General Regulations (Cont'd)

2.6 Definitions (Cont'd)

Signaling Point (SP)

The term "Signaling Point (SP)" denotes an SS7 network interface element capable of originating and terminating SS7 trunk signaling messages.

Signaling System 7 (SS7)

The term "Signaling System 7 (SS7)" denotes the layered protocol used for standardized common channel signaling in the United States and Puerto Rico.

Signal Transfer Point (STP)

The term "Signal Transfer Point (STP)" denotes a packet switch which provides access to the Telephone Company's SS7 network and performs SS7 message signal routing and screening.

Signal Transfer Point (STP) Port

The term "Signal Transfer Point (STP) Port" denotes the point of termination and interconnection to the STP.

Singing Return Loss

The term "Singing Return Loss" denotes the frequency weighted measure of return loss at the edges of the voiceband (200 to 500 Hz and 2500 to 3200 Hz), where signing (instability) problems are most likely to occur.

2. General Regulations (Cont'd)

2.6 Definitions (Cont'd)

Subrate Multiplexing

The term "Subrate Multiplexing" allows multiplexing of up to five 9.6, ten 4.8 or twenty 2.4 DS0-A subrate channels to one DS0-B channel in a wire center.

Subtending End Office of an Access Tandem

The term "Subtending End Office of an Access Tandem" denotes an end office that has final trunk group routing through that tandem.

Synchronous Test Line

The term "Synchronous Test Line" denotes an arrangement in an end office which performs marginal operational tests of supervisory and ring-tripping functions.

Tandem-Switched Transport

The term "Tandem-Switched Transport" denotes transport from the serving wire center (SWC) to the end office (EO) or from the tandem to the EO that is switched at a tandem switch. Tandem-switched transport between a SWC and an EO consists of circuits dedicated to the use of a single customer from the SWC to the tandem (although this dedicated link will not exist if the SWC and the tandem are located in the same place) and circuits used in common by multiple customers from the tandem to the EO.

Telecommunications Service Priority (TSP) System

The term "Telecommunications Service Priority (TSP) System" or "TSP System" or "NSEP TSP System" refers to the regulatory, administrative and operational system authorizing and providing for priority treatment (i.e., the provisioning and restoration) of NSEP Services.

Terminating Direction

The term "Terminating Direction" denotes the use of Access Service for the completion of calls from an IC premises to an End User Premises.

Toll VoIP-PSTN Traffic (N)

The term "Toll VoIP-PSTN Traffic" denotes a customer's interexchange voice traffic exchanged with the Telephone Company in Time Division Multiplexing format over PSTN facilities, which originates and/or terminates in Internet Protocol (IP) format. "Toll VoIP-PSTN Traffic" originates and/or terminates in IP format when it originates from and/or terminates to an end user customer of a service that requires IP-compatible customer premises equipment. (N)

Transmission Measuring (105 Type) Test Line/Responder

The term "Transmission Measuring (105 Type) Test Line/Responder" denotes an arrangement in an end office which provides far-end access to a responder and permits two-way loss and noise measurements to be made on trunks from a near end office.

RECEIVED
DEC 20 2011
NPSC-Comm. Dept.

2. General Regulation (Cont'd)

2.6 Definitions (Cont'd)

Transmission Path

The term "Transmission Path" denotes an electrical path capable of transmitting signals within the range of the service offering, e.g., a voice grade transmission path is capable of transmitting voice frequencies within the approximate range of 300 to 3000 Hz. A transmission path is comprised of physical or derived facilities consisting of any form or configuration of plant typically used in the telecommunications industry.

Trunk

The term "Trunk" denotes a communications path connecting two switching systems in a network, used in the establishment of an end-to-end connection.

Trunk Group

The term "Trunk Group" denotes a set of trunks which are traffic engineered as a unit for the establishment of connections between switching systems in which all of the communications paths are interchangeable.

Trunk Side Connection

The term "Trunk Side Connection" denotes the connection of a transmission path to the trunk side of a local exchange switching system.

2. General Regulations (Cont'd)

2.6 Definitions (Cont'd)

Two-Wire to Four-Wire Conversion

The term "Two-Wire to Four-Wire Conversion" denotes an arrangement which converts a four-wire transmission path to a two-wire transmission path to allow a four-wire facility to terminate in a two-wire entity (e.g., a central office switch).

Uniform Service Order Code

The term "Uniform Service Order Code" denotes a three or five character alphabetic, numeric, or an alphanumeric code that identifies a specific item of service or equipment. Uniform Service Order Codes are used in the Telephone Company billing system to generate recurring rates and nonrecurring charges.

V and H Coordinates Method

The term "V and H coordinates Method" denotes a method of computing airline miles between two points by utilizing an established formula which is based on the vertical and horizontal coordinates of the two points.

WATS Serving Office

The term "WATS Serving Office" denotes a Telephone Company designated serving wire center where switching, screening and/or recording functions are performed in connection with the closed-end of WATS or WATS-type services.

Wire Center

The term "Wire Center" denotes a building in which one or more central offices, used for the provision of Telephone Exchange Services, are located.

ACCESS SERVICE

3. Access Charge Residual Access Service

The Telephone Company will provide Access Charge Residual Access Service to customers.

3.1 General Description

Access Charge Residual Access provides for the use of Telephone Company common lines by customers for access to end users to furnish Intrastate Communications.

Access Charge Residual Access is provided where the customer obtains Telephone Company Switched Access Service under this Tariff.

3.2 Limitations

A. A telephone number is not provided with Access Charge Residual Access.

B. Detail billing is not provided for Access Charge Residual Access.

C. Directory listings are not included in the rates and charges for Access Charge Residual Access.

D. Intercept arrangements are not included in the rates and charges for Access Charge Residual Access.

E. All trunk side connections provided in the same combined access group will be limited to the same features and operating characteristics.

3.3 Undertaking of the Telephone Company

A. Where the customer is provided with Switched Access Service under other sections of this Tariff, the Telephone Company will provide the use of Telephone Company common lines by a customer for access to end users at rates and charges as set forth in 3.7 following.

3. Access Charge Residual Access Service (Cont'd)

3.3 Undertaking of the Telephone Company (Cont'd)

B. When the customer is provided sent-paid pay telephone access, the Telephone Company will collect sent-paid monies from pay telephone stations and will remit monies to the customer. The Telephone Company will provide message call detail format and bill periods used to determine the monies upon request from the customer.

3.4 Obligations of the Customer

A. The customer facilities at the premises of the ordering customer shall provide the necessary on-hook and off-hook supervision.

B. Where sent-paid pay telephone access is provided to the customer and the customer wishes to receive the monies it is due for the monies collected by the Telephone Company from coin pay telephone stations, the customer shall furnish to the Telephone Company, at a location specified by the Telephone Company, the customer message call detail for the customer sent-paid (coin) pay telephone calls in accordance with the Telephone Company collection schedule. The customer message call detail furnished shall be in a standard format established by the Telephone Company. If no customer message call detail is received from the customer for each bill period established by the Telephone Company, the Telephone Company will assume there were no customer sent-paid (coin) pay telephone calls for the period. In addition, the customer shall furnish a schedule of its charges for sent-paid (coin) calls to the Telephone Company at a location and date as specified by the Telephone Company.

ACCESS SERVICE

3. Access Charge Residual Access Service (Cont'd)

3.5 Payment Arrangements

The Telephone Company will bill an Access Charge Residual charge in accordance with the provisions of Section 2.4 of this Tariff.

3.6 Rate Regulations

A. Access Charge Residual charges will be billed to the customer on a minutes-of-use basis. This charge is based on the residual cost of intrastate access service as described below.

B. Minutes-of-use Access Charge Residual charges are developed as follows:

1. The forecasted intrastate toll revenue requirement associated with the provision of intrastate access service is determined according to the methodology set forth in Parts 67 and 69 of the FCC's Rules and Regulations, as modified by the Nebraska Public Service Commission for application to telecommunications service originated and terminated within the state of Nebraska and modified to include Public Service Commission mandated reductions to the non-traffic sensitive revenue requirement. For average schedule companies, the Non-Traffic Sensitive (NTS) revenue requirements is 62 percent of the A-1 schedule settlement. This is added to projected revenue described in (b)(2) following to yield the forecasted intrastate toll revenue requirements.

2. Forecasted Traffic Sensitive access revenue is developed by multiplying the appropriate rates in 6. and 7. following by the estimated usage for these services. Forecasted revenue from separate contracts includes any access compensation recovered through separate contracts.

ACCESS SERVICE

3. Access Charge Residual Access Service (Cont'd)

3.6 Rate Regulations (Cont'd)

B. (Cont'd)

3. The residual cost of intrastate access service is determined by subtracting from the forecasted intrastate toll revenue requirement as described in (b)(1) preceding by the following: (1) forecasted Traffic Sensitive access revenue and forecasted revenue from separate contracts as described in (b)(2) preceding.

4. The annual residual revenue requirement as described in (B)(3) preceding is divided by the forecasted annual minutes-of-use to determine the Access Charge Residual Rate.

ACCESS SERVICE

3. Access Charge Residual Access Service (Cont'd)

3.6 Rate Regulations (Cont'd)

B. (Cont'd)

5. The monthly intrastate Access Charge Residual rate determined in (B)(4) preceding is multiplied by the monthly Access minutes-of-use.

C. The application for Non-Premium Access rates will be discounted at a level specified by the Public Service Commission. The basis for applying is defined in 6.7 following. The discount will apply to the Access Charge Residual in 3.8 following and Switched Access rates in 6. following.

ACCESS SERVICE

3. Access Charge Residual Access Service (Cont'd)

3.7 Rates and Charges

Access Charge Residual access rates are listed as follows.

Following is a list of companies along with their Intrastate monthly charge per minutes-of-use:

Company	Intrastate Monthly Charge Per MOU
Windstream Nebraska, Inc.	$0.0000
Windstream of the Midwest, Inc.	$0.0000

ACCESS SERVICE

Section 4

Reserved for future use

ACCESS SERVICE

5. Ordering Options for Switched and Special Access Service

5.1 General

This section sets forth the regulations and order related charges for Access Orders for Switched and Special Access Services. These charges are in addition to other applicable charges as set forth in other sections of this tariff.

An Access Order is an order to provide the customer with Switched Access Service or Special Access Service or to provide changes to existing services.

5.1.1 Ordering Conditions

A customer may order any number of services of the same type and between the same premises on a single Access Order. All details for services for a particular order must be identical except for those for multipoint service.

The customer shall provide all information necessary for the Telephone Company to provide and bill for the requested service. In addition to the order information required in 5.2 following, the customer must also provide:

- Customer name and premises address(es).
- Billing name and address (when different from customer name and address).
- Customer contact name(s) and telephone number(s) for the following provisioning activities: order negotiation, order confirmation, interactive design, installation and billing.

Orders for Feature Group A Switched Access Service shall be in lines.

Orders for Feature Group B Switched Access Service shall be in trunks.

Orders for Feature Group C and D Switched Access Service are set forth in 5.2 following.

5. Ordering Options for Switched and Special Access Service

5.1 General

5.1.1 Ordering Conditions (Cont'd)

When ordering Switched Access Service, the customer must specify whether the service is to be provided as (1) Direct-Trunked Transport to the end office, (2) Direct-Trunked Transport to a tandem which connects with Tandem-Switched Transport from the tandem to the end office or (3) Tandem-Switched Transport to the end office. When all or a portion of service is ordered as Direct-Trunked Transport, the customer must specify the type and quantity of Direct-Trunked Transport facility (e.g., Voice Grade or High Capacity DS1 or DS3) in addition to a percent of interstate use (PIU).

The Customer must also specify the type of Entrance Facility to be used for Switched Access (e.g., Voice Grade or High Capacity). For High Capacity Entrance Facilities, the customer must specify the facility assignment and the channel assignment for each trunk in addition to a percent of interstate use (PIU).

Direct-Trunked Transport is available at all tandems and at all end offices except those end offices identified in NATIONAL EXCHANGE CARRIER ASSOCIATION, INC. TARIFF F.C.C. NO. 4. as not having the capability to provide Direct-Trunked Transport. Direct-Trunked Transport is not available: (1) from end offices that provide equal access through a centralized equal access arrangement, (2) from end offices that lack recording or measurement capability, and (3) for originating 8XX calls from non-Service Switching Point (SSP) equipped end offices that can not accommodate direct trunking of originating 8XX calls.

When the customer has both Tandem-Switched Transport and Direct-Trunked Transport at the same end office, Alternate Traffic Routing as set forth in 6.3.1(N) following can be provided at the customer's option. As set forth in 6.7.12(C) following, for end offices that lack capability to measure overflow, the customer must provide a percent direct-routed (PDR) to be used in the apportionment of total access minutes for calculating the tandem-switched access minutes.

A customer's Local Transport may be connected to the Entrance Facility of another customer, providing the other customer submits a Letter of Authorization for this connection and assumes full responsibility for the cost of the Entrance Facility.

5. Ordering Options for Switched and Special Access Service

5.1 General (Cont'd)

5.1.2 Provision of Other Services

(A) Testing Service, Additional Labor, Telecommunications Service Priority (TSP), and Special Facilities Routing shall be ordered with an Access Order or as set forth in (B) following. The rates and charges for these services, as set forth in other sections of this tariff, will apply in addition to the ordering charges set forth in this section and the rates and charges for the Access Service with which they are associated.

(B) With the agreement of the Telephone Company, the items listed in (A) preceding may subsequently be added to the order at any time, up to and including the service date for the Access Service. When added subsequently, charges for a design change as set forth in 5.2.2(C) following will apply when an engineering review is required.

(C) Additional Engineering is not an ordering option, but will be applied to an Access Order when the Telephone Company determines that Additional Engineering is necessary to accommodate a customer request. Additional Engineering will only be required as set forth in 13.1 following. When it is required, the customer will be so notified and will be furnished with a written statement setting forth the justification for the Additional Engineering as well as an estimate of the charges. If the customer agrees to the Additional Engineering, a firm order will be established. If the customer does not want the service or facilities after being notified that Additional Engineering of Telephone Company facilities is required, the order will be withdrawn and no charges will apply. Once a firm order has been established, the total charge to the customer for the Additional Engineering may not exceed the estimated amount by more than 10%.

The regulations, rates and charges for Additional Engineering are as set forth in 13.1 following and are in addition to the regulations, rates and charges specified in this section

5. Ordering Options for Switched and Special Access Service (Cont'd)

5.1 General (Cont'd)

5.1.3 Special Construction

The regulations, rates and charges for special construction are set forth in Windstream Nebraska, Inc., TARIFF F.C.C. No. 3 and are in addition to the regulations, rates and charges specified in this section.

5.2 Access Order

An Access Order is used by the Telephone Company to provide a customer Access Service as follows:

- Switched Access Services as set forth in 6. following,
- Special Access Services as set forth in 7. following, and
- Other Services as set forth in 5.1.2 preceding.

When placing an order for Access Service, the customer shall provide, at a minimum, the following information in addition to that set forth in 5.1.1 preceding:

- For Feature Group A Switched Access Service, the customer shall specify the number of lines and the first point of switching (i.e., dial tone office), the Local Transport options and Local Switching options desired. In addition, the customer shall specify whether the off-hook supervisory signalling is provided by the customer's equipment before the called party answers, or is forwarded by the customer's equipment when the called party answers, or is forwarded by the customer's equipment when the called party answers. The customer shall also specify which lines are to be arranged in multiline hunt group arrangements and which lines are to be provided as single lines.

5. Ordering Options for Switched and Special Access Service (Cont'd)

5.2 Access Order (Cont'd)

- For Feature Group B Switched Access Service, the customer shall specify the number of trunks and the end office when direct routing to the end office is desired or the access tandem switch when routing is desired via an access tandem switch and Local Transport options and Local Switching options desired. The customer shall also specify for terminating only access minutes, whether the trunks are to be arranged in trunk group arrangements or provided as single trunks.

- For Feature Group C and D Switched Access Service, the customer shall specify the number of busy hour minutes of capacity (BHMC) from the customer designated premises to the end office or Operator Transfer Service location by Feature Group and by type of BHMC and the number of BHMC or trunks (for customers other than providers of MTS or WATS) required for or to be converted to an SS7 Signaling capability. This information is used to determine the number of transmission paths as set forth in 6.5.5 following. The customer then specifies the Local Transport, Local Switching, 500 or 900 NXX Service options, and Operator Transfer Service Option.

- When Feature Group C or D is ordered with the SS7 optional feature, the customer shall specify a reference to existing signaling connections or reference a related SS7 signaling connection order. When ordering SS7 signaling, the customer shall provide the Signaling Transfer Point codes, location identifier codes and circuit identifier codes. In addition, the customer shall work cooperatively with the Telephone Company to determine the number of SS7 signaling connections required to handle its signaling traffic.

- For each 500 or 900 NXX Access Service that is ordered, the order shall specify the NXXs to be translated. Nonrecurring charges are assessed on a per SAC order basis regardless of the number of NXX codes specified on the order. Subsequent requests for additional NXXs will cause another nonrecurring charge to be assessed. Customer assigned NXX codes which have not been assigned will be blocked.

  Customers may, at their option, order FGD by specifying the number of trunks desired between customer designated premises and an entry switch or Operator Transfer Service location. When ordering by trunk quantities rather than BHMC quantities to an access tandem, the customer must also provide the Telephone Company an estimate of the amount of traffic it will generate to and/or from each end office subtending the access tandem to assist the Telephone Company in its own efforts to project further facility requirements.

5. Ordering Options for Switched and Special Access Service (Cont'd)

5.2 Access Order (Cont'd)

For the Operator Transfer Service Option ordered in conjunction with Feature Group C or Feature Group D Switched Access Service as set forth in 6.2.3 and 6.2.4 following, the customer must specify the number of trunks or BHMCs desired between its premises and the Telephone Company operator services location.

Operator Transfer Service is provided at operator services locations as set forth in National Exchange Carrier Association, Inc. Tariff F.C.C. No. 4.

Special Access Service may be ordered for connection with Feature Groups A, B, C and D Switched Access Service at Telephone Company designated WATS Serving Offices (WSOs) for the provision of WATS or WATS-type services and may be ordered separately by a customer other than the customer which orders the Feature Groups A, B, C and D Switched Access Service. For the Special Access Service the customer shall specify the customer designated premises at which the Special Access Service terminates, the type of line (i.e., two-wire or four-wire), the type of calling (i.e., originating, terminating, or two way) and the type of Supervisory Signaling. When the optional screening, switching and/or recording functions are not provided at the customer serving wire center, Channel Mileage, as set forth in 7.2.1 following, must be ordered between that wire center and the WSO where the screening, switching and/or recording functions can be provided.

- For all Special Access Services, the customer must specify the customer designated premises or hubs involved, the type of service (e.g., Voice Grade, High Capacity, etc.), the channel interface, technical specification package and options desired. For multipoint services, the channel interface at each customer designated premises may, at the request of the customer, be different but all such interfaces shall be compatible.

5. Ordering Options for Switched and Special Access Service (Cont'd)

5.2 Access Order (Cont'd)

- When ordering High Capacity Optional Rate plans or upgrades to the plans, discontinuance charges, as specified in 7.2.8 following, will not apply if the conditions set forth in 7.2.8 following are met and the customer provides the following ordering information:

  Term Discounts - Upgrades in Capacity

  - The customer's order for the disconnect of the existing DS3 Service and the installation of the new DS3 Service are received at the same time and specifically reference the application of upgrade in capacity.

  - The customer's disconnect order for the existing DS3 Service must reference the installation order.

  Customer orders to install and disconnect DS3 services provided under a Term Discount plan where the number of DS3s remains constant and the customer wishes to maintain the existing Term Discount period and minimum service period must:

  - Be received at the same time.

  - Reference continuation of the existing Term Discount period and the minimum service period on both the installation and disconnect orders.

  DS3 Capacity Discounts - Upgrades

  - The customer's order for the disconnect of the current DS3 Capacity Interface and order for the installation of the upgraded DS3 Capacity Interface are received by the telephone company at the same time and specifically reference the application of upgrade in capacity.

  - The customer's disconnect order for the existing DS3 Service must reference the installation order.

5. Ordering Options for Switched and Special Access Service (Cont'd)

5.2 Access Order (Cont'd)

The BHMC may be determined by the customer in the following manner. For each day (8 a.m. to 11 p.m., Monday through Friday, excluding national holidays), the customer shall determine the highest number of minutes of use for a single hour (e.g., 55 minutes in the 10-11 AM hour). The customer shall, for the same hour period (i.e., busy hour) for each of twenty consecutive business days, pick the twenty consecutive business days in a calendar year which add up to the largest number of minutes of use. Both originating and terminating minutes shall be included. The customer shall then determine the average busy hour minutes of capacity (i.e., BHMC) by dividing the largest number of minutes of use figure for the same hour period for the consecutive twenty business day period by 20. This computation shall be performed for each end office the customer wishes to serve. These determinations thus establish the forecasted BHMC for each end office.

Where the Special Access Service is exempt from the Special Access Surcharge, as set forth in 7.3 following and the customer shall furnish with the order the certification as set forth in 7.3.3 following.

5.2.1 Access Order Service Date

(A) The Telephone Company will provide the Access Service in accordance with the customer's requested service date, subject to the following conditions:

(1) The Telephone Company shall make available to all customers upon request a schedule of applicable service dates for Switched and Special Access Services. The schedule shall specify the applicable service date for services and the quantities of services that can be provided in the applicable service date.

The Telephone Company will not accept orders for service dates which exceed the applicable service date by more than six months.

5. Ordering Options for Switched and Special Access Service (Cont'd)

5.2 Access Order (Cont'd)

5.2.1 Access Order Service Date (Cont'd)

(A) (Cont'd)

(1) (Cont'd)

All part-time Video services are subject to a service inquiry. A service inquiry is a request to the Telephone Company to determine if facilities exist to provide the service ordered and to deter mine the service date on which service can be provided to the customer.

Access Services will be installed during Telephone Company business days. If a customer requests that installation be done outside of scheduled work hours, and the Telephone Company agrees to this request, the customer will be subject to applicable Additional Labor Charges as set forth in 13.2.6(A) following.

5. Ordering Options for Switched and Special Access Service (Cont'd)

5.2 Access Order (Cont'd)

5.2.2 Access Order Modifications

The customer may request a modification of its Access Order prior to the service date. The Telephone Company will make every effort to accommodate a requested modification when it is able to do so with the normal work force assigned to complete such an order within normal business hours. If the modification cannot be made with the normal work force during normal business hours, the Telephone Company will notify the customer. If the customer still desires the Access Order modification, the Telephone Company will schedule a new service date. All charges for Access Order modifications will apply on a per occurrence basis.

Any increase in the number of Special Access Service channels or Switched Access Service lines, trunks or busy hour minutes of capacity or CCS/SS7 Port Terminations will be treated as a new Access Order (for the increased amount only).

If order modifications are necessary to satisfy the transmission performance for a Special Access Service ordered by a customer, these changes will be made without order modification charges being incurred by the customer.

(A) Service Date Change Charge

The customer may request a change of service date on a pending Access Order prior to the service date. A change of service date is a change of the scheduled service date by the customer to either an earlier date or a later date which does not exceed 30 calendar days from the original service date.

5. Ordering Options for Switched and Special Access Service (Cont'd)

5.2 Access Order (Cont'd)

5.2.2 Access Order Modifications (Cont'd)

(A) Service Date Change Charge (Cont'd)

If the Telephone Company determines that the customer's request can be accommodated without delaying the service dates for orders of other customers, the service date will be changed and the Service Date Change Charge applied to the order.

If the service date is changed to an earlier date, and the Telephone Company determines additional labor or extraordinary costs are necessary to meet the earlier service date requested by the customer, the customer will be notified by the Telephone Company that Expedited Order Charges as set forth in (D) following apply. Such charges will apply in addition to the Service Date Change Charge.

If the requested service date exceeds 30 calendar days following the original service date, and the Telephone Company determines that the customer's request can be accommodated, the Telephone Company will cancel the original order and apply the Cancellation Charges as set forth in 5.2.3 following. A new Access Order with the new service date will be issued. The Service Date Change Charge will not apply.

If the service date is changed due to a Design Change as set forth in (C) following, the Service Date Change Charge will apply.

5. Ordering Options for Switched and Special Access Service (Cont'd)

5.2 Access Order (Cont'd)

5.2.2 Access Order Modifications (Cont'd)

(A) Service Date Change Charge (Cont'd)

A Service Date Change Charge will apply, on a per order per occurrence basis, for each service date changed. The applicable charge is:

	USOC	Charge
Service Date Change Charge, per order	OMC	$23.88

(B) Partial Cancellation Charge

Any decrease in the number of ordered Special Access Service channels or Switched Access Service lines, trunks or busy hour minutes of capacity or CCS/SS7 Port Terminations will be treated as a partial cancellation and the charges as set forth in 5.2.3(B) following will apply.

(C) Design Change Charge

The customer may request a design change to the service ordered. A design change is any change to an Access Order which requires engineering review. An engineering review is a review by Telephone Company personnel, of the service ordered and the requested changes to determine what changes in the design, if any, are necessary to meet the changes requested by the customer. Design changes include such things as the addition or deletion of optional features or functions or a change in the type of Transport Termination (Switched Access only), type of channel interface, type of Interface Group or technical specification package. Design changes do not include a change of customer designated premises, end office switch, Feature Group type or Special Access Service channel type. Changes of this nature will require the issuance of a new order and the cancellation of the original order with appropriate cancellation charges applied.

5. Ordering Options for Switched and Special Access Service (Cont'd)

5.2 Access Order (Cont'd)

5.2.2 Access Order Modifications (Cont'd)

(C) Design Change Charge (Cont'd)

The Telephone Company will review the requested change, notify the customer whether the change is a design change, if the change can be accommodated and if a new service date is required. If the customer authorizes the Telephone Company to proceed with the design change, a Design Change Charge will apply in addition to the charge for Additional Engineering as set forth in 13.1.1 following. If a change of service date is required, the Service Date Change Charge as set forth in (A) preceding will also apply.

The Design Change Charge will apply on a per order per occurrence basis, for each order requiring a design change. The applicable charge is:

	USOC	Charge
Design Change Charge, per order	H28	$21.50

(D) Expedited Order Charge

When placing an Access Order, a customer may request a service date that is prior to the applicable service date. A customer may also request an earlier service date on a pending Access Order. If the Telephone Company determines that the service can be provided on the requested date and that additional labor cost or extraordinary costs are required to meet the requested service date, the customer will be notified and will be provided with an estimate of the additional charges involved. Such additional charges will be determined and billed to the customer as follows:

ACCESS SERVICE

5. Ordering Options for Switched and Special Access Service (Cont'd)

5.2 Access Order (Cont'd)

5.2.2 Access Order Modifications (Cont'd)

(D) Expedited Order Charge (Cont'd)

To calculate the additional labor charges, the Telephone Company will, upon authorization from the customer to incur the additional labor charges, keep track of the additional labor hours used to meet the request of the customer and will bill the customer at the applicable Additional Labor charges as set forth in 13.2.6(A) following.

To develop, determine and bill the customer the extra ordinary costs which may be involved, the special construction terms and conditions as set forth in Windstream Nebraska, Inc., TARIFF F.C.C. No. 3 will be used by the Telephone Company. Authorization to incur the costs and to bill the customer will be in accordance with the terms and conditions of Windstream Nebraska, Inc., TARIFF F.C.C. No. 3.

When the request for expediting occurs subsequent to the issuance of the Access Order, a Service Date Change Charge as set forth in (A) preceding also applies.

5. Ordering Options for Switched and Special Access Service (Cont'd)

5.2 Access Order (Cont'd)

5.2.3 Cancellation of an Access Order

(A) A customer may cancel an Access Order for the installation of service on any date prior to the service date. The cancellation date is the date the Telephone Company receives written or verbal notice from the customer that the order is to be cancelled. The verbal notice must be followed by written confirmation within 10 days. If a customer or a customer's end user is unable to accept Access Service within 30 calendar days after the original service date, the customer has the choice of the following options:

- The Access Order shall be cancelled and charges set forth in (B) following will apply, or

- Billing for the service will commence.

In such instances, the cancellation date or the billing date, depending on which option is selected by the customer, shall be the 31st day beyond the original service date of the Access Order.

(B) When a customer cancels an Access Order for the installation of service, a Cancellation Charge will apply as follows:

(1) Installation of Switched or Special Access Service facilities is considered to have started when the Telephone Company incurs any cost in connection therewith or in preparation thereof which would not otherwise have been incurred.

(2) Where the customer cancels an Access Order prior to the start of installation of access facilities, no charges shall apply.

5. Ordering Options for Switched and Special Access Service (Cont'd)

5.2 Access Order (Cont'd)

5.2.3 Cancellation of an Access Order (Cont'd)

(B) (Cont'd)

(3) Where installation of access facilities has been started prior to the cancellation, the charges specified following shall apply.

Applicable cancellation charges are based upon the amount of provisioning completed by the Telephone Company at the time the order is canceled. The charges are determined from certain Telephone Company critical dates associated with access order provisioning intervals. At any point in the provisioning interval, the Telephone Company's able to determine which critical date was last completed and can thus determine what percentage of the Telephone Company's provisioning costs have been incurred as of the critical date. Critical dates tracked by the Telephone Company are as follows:

Order Date (OD)
Date order received from Customer
Firm Order Confirmation (FOC)
Date the due date and other information are sent to the Customer.
Memo Date (MD)
Date memo to other departments in the Telephone Company is sent.
Design Record Layout Date (DLRD)
Date circuit design is sent to the Customer.
Work Order Date (WOD)
Date work order is sent to other departments to install the circuit.
Plant Test Date (PTD)
Date all equipment between customer premises and office is installed and tested.
Completion Date (CD) / Due Date (DD)
Date the order is deemed completed and turned over to the Customer.

5. Ordering Options for Switched and Special Access Service (Cont'd)

5.2 Access Order (Cont'd)

5.2.3 Cancellation of an Access Order (Cont'd)

(B) (Cont'd)

(3) (Cont'd)

When a customer cancels an Access Order for the installation of service, a Cancellation Charge will apply as follows:

(a) Installation of Switched or Special Access Service facilities is considered to have started when the Telephone Company incurs any cost in connection therewith or in preparation thereof which would not otherwise have been incurred. Installation shall have commenced when Firm Order Confirmation is issued to the customer.

(b) When the customer cancels an Access Order prior to the start of installation of access facilities, no charges shall apply.

(c) Where installation of access facilities has been started prior to the cancellation, the charges specified following shall apply.

A charge equal to the non-recurring charge for Switched or Special Access Service, as determined in 6.7.1(C) following and 7.2.2 following, as appropriate, times the appropriate percentage listed in column (D) following shall be charged in the following manner:

The last completed critical date (column (A) following will be used in calculating cancellation charges. The number of working days between the critical dates (columns (B) and (C) following), is the typical number of days between critical dates. The actual number of days may differ due to circuit variations and individual circumstances. The actual completed critical date determines the percentage to be used to calculate the Cancellation Charge. The following chart will be used to determine the Cancellation Charge to be assessed.

5. Ordering Options for Switched and Special Access Service (Cont'd)

5.2 Access Order (Cont'd)

5.2.3 Cancellation of an Access Order (Cont'd)

(B)(3)(c) (Cont'd)

Type of Service	(A) Critical Date	(B) Number Of Days After Order Date	(C) Number Of Days Before Due Date	(D) Percent Of Total Charge
FGA	OD	0		0%
	FOC	3		4%
	MD	4		6%
	DLRD	10		21%
	WOD	16		21%
	PTD		3	88%
	CD/DD		0	100%
FGB, C, D	OD	0		0%
	FOC	3		4%
	MD	4		6%
	DLRD	10		13%
	WOD	16		13%
	PTD	3		57%
CD/DD			0	100%
Special Voice Grade	OD	0		0%
	FOC	3		5%
	MD	4		7%
	DLRD	11		16%
	WOD	17		34%
	PTD		3	92%
	CD/DD		0	100%
Special Metallic Telegraph	OD	0		0%
	FOC	3		6%
	MD	4		8%
	DLRD	11		19%
	WOD	17		35%
	PTD		3	91%
	CD/DD		0	100%

5. Ordering Options for Switched and Special Access Service (Cont'd)

5.2 Access Order (Cont'd)

5.2.3 Cancellation of an Access Order (Cont'd)

(B) (Cont'd)

(4) Charges applicable as specified in (3) preceding include the nonrecoverable cost of equipment and material ordered, provided or used, plus the nonrecoverable cost of installation and removal including the costs of engineering, labor, supervision, transportation, rights-of-way and other associated costs.

(C) When a customer cancels an order for the discontinuance of service, no charges apply for the cancellation.

(D) If the Telephone Company misses a service date by more than 30 days due to circumstances over which it has direct control (excluding, e.g., acts of God, governmental requirements, work stoppages and civil commotions), the customer may cancel the Access Order without incurring cancellation charges.

5. Ordering Options for Switched and Special Access Service (Cont'd)

5.2 Access Order (Cont'd)

5.2.4 Selection of Facilities For Access Orders

(A) When there are High Capacity facilities to a hub on order or in service for the customer's use, the customer may request a specific channel or transmission path be used to provide the Switched or Special Access Service requested in an Access Order. The Telephone Company will make a reasonable effort to accommodate the customer request.

(B) For all other Access Orders, the option to request a specific transmission path or channel is not provided except as provided for under Special Facilities Routing as set forth in 11. following.

5.2.5 Minimum Period

(A) Except as set forth in (B), 6 and 7. following, the minimum period for which Access Service is provided and for which charges are applicable, is one month.

(B) The minimum period for part-time Video Special Access Services is one day even though the service will be provided only for the duration of the event specified on the order (e.g., one-half hour, two hours, five hours, etc.)

5. Ordering Options for Switched and Special Access Service (Cont'd)

5.2 Access Order (Cont'd)

5.2.6 Minimum Period Charges

When Access Service is disconnected prior to the expiration of the minimum period, charges are applicable for the balance of the minimum period. A disconnect constitutes facilities being returned to available inventory.

The Minimum Period Charge for monthly billed services will be determined as follows:

(A) For Switched Access Service, the charge for a month or fraction thereof is equal to the applicable minimum monthly rates for the capacity as set forth in 6.7.3 following.

(B) For Special Access Service and flat-rated Switched Access Service, the charge for a month or fraction thereof is the applicable monthly rates for the appropriate channel type as set forth in 7.5 through 7.10 following.

The minimum Period Charge for part-time Video Services is the applicable daily rate for the appropriate channel type as set forth in 7.8 following.

5.2.7 Shared Use Facilities

Shared Use (i.e., Switched and Special Access Services provided over the same High Capacity facilities) is allowed. Shared use facilities to a hub will be ordered and provided as Special Access Service. While shared use is allowed, individual services utilizing these facilities must be ordered either as Switched Access Service or Special Access Service. When placing the order for the individual service(s), the customer must specify a channel assignment for each service ordered.

5. Ordering Options for Switched and Special Access Service (Cont'd)

5.2 Access Order (Cont'd)

5.2.8 Access Orders For Services Provided By More Than One Exchange Telephone Company

(A) Access Services provided by more than one Telephone Company are services where one end of the Local Transport, Directory Transport or Channel Mileage element is in the operating territory of one Telephone Company and the other end of the element is in the operating territory of a different Telephone Company or where the 500 or 900 NXX Access Service and the end office are not provided by the same Telephone Company.

The ordering procedure for this service is dependent upon the billing arrangement, as set forth in 2.4.7 preceding, to be used by the Telephone Companies involved in providing the Access Service. The Telephone Company will notify the customer which of the ordering procedures will apply.

(1) Single Company Billing

The Telephone Company receiving the order from the customer will arrange to provide the service and bill the customer as set forth in 2.4.7(A)(1). The customer will place the order with the Telephone Company as follows:

(a) For Switched Access Services the customer will place the order with the Telephone Company in whose territory the first point of switching is located. The first point of switching is:

- FGA - dial tone office

When the first point of switching is not in the same Telephone Company's territory as the Interexchange Carrier premises, the customer must supply a copy of the order to the Telephone Company in whose territory the Interexchange Carrier premises is located.

5. Ordering Options for Switched and Special Access Service (Cont'd)

5.2 Access Order (Cont'd)

5.2.8 Access Orders For Services Provided By More Than One Exchange Telephone Company (Cont'd)

(A) (Cont'd)

(2) Multiple Company (Interconnection Point) Billing

Each Telephone Company will provide its portion of the Access Service within its operating territory to an interconnection point(s) (IP) with the other Telephone Company(s). The interconnection point(s) and Billing Percentages will be determined by the Telephone Companies involved in providing the Access Service and listed in EXCHANGE CARRIER ASSOCIATION TARIFF F.C.C. NO. 4. Each Telephone Company will bill the customer for its portion of the service as set forth in 2.4.7(A)(2). All other appropriate charges in each Telephone Company tariff are applicable.

5. Ordering Options for Switched and Special Access Service (Cont'd)

5.2 Access Order (Cont'd)

5.2.8 Access Orders For Services Provided By More Than One Exchange Telephone Company (Cont'd)

(A) (Cont'd)

(2) (Cont'd)

(b) For Feature Groups B, C and D Switched Access Services, the customer must place an order with the Telephone Company in whose territory the end office is located. Customers may, at their option, order FGD to the access tandem.

(c) Customers ordering Special Access Service to be interconnected with Switched Access Services at Telephone Company designated WATS Serving Offices for the provision of WATS or WATS-type Services must place an order with each Telephone Company in whose territory the end office and the WATS Serving Office are located, if they are not collocated.

(d) Except for Special Access Service as set forth in (c) above or as set forth in (e) below, the customer may place the order for a Special Access Service with either Exchange Telephone Company.

(e) For Special Access Service involving a hub(s) the customer must place the order with the Telephone Company in whose territory the hub(s) is located.

(g) For initiation, additions, changes or deletions to the 500 or 900 NXX Access Service, the customer must place an order with the Telephone Company who provides the 500 or 900 NXX Access Service translation. The customer must also provide a copy of the order to the Telephone Companies subtending the 500 or 900 NXX Access Service translation office.

For the service(s) ordered as set forth preceding, the customer must also supply a copy of the order to the Telephone Company in whose operating territory a customer designated premises is located and any other Telephone Company(s) involved in providing the service.

ACCESS SERVICE

6. Switched Access Service

6.1 General

Switched Access Service, which is available to customers for their use in furnishing their services to end users, provides a two-point electrical communications path between a customer's premises and an end user's premises. It provides for the use of common terminating, switching and trunking facilities, and for the use of common subscriber plant of the Telephone Company. Switched Access Service provides for the ability to originate calls from an end user's premises to a customer's premises, and to terminate calls from a customer designated premises to an end user's premises in the LATA where it is provided. Specific references to material describing the elements of Switched Access Service are provided in 6.1.1 and 6.1.2 following.

Rates and charges for Switched Access Service depend generally on the specific Feature Group ordered by the customer, e.g., for MTS or WATS services or MTS-WATS equivalent services, and whether it is provided in a Telephone Company end office that is equipped to provide equal or non-equal access. Rates and charges for Switched Access Service are set forth in 6.8 following. The application of rates for Switched Access Service is described in 6.7 following. Rates and charges for services other than Switched Access Service, e.g., a customer's interLATA toll message service, may also be applicable when Switched Access Service is used in conjunction with these other services. Descriptions of such applicability are provided in 6.2.1(A)(7), 6.2.1(B)(3), 6.2.2(A)(5), 6.2.2(B)(4), 6.2.3(A)(5), 6.2.4(A)(4), 6.7.9 and 6.7.11 following. Finally, a credit is applied against line side Switched Access Service charges as described in 6.7.10 following.

6. Switched Access Service (Cont'd)

6.1 General (Cont'd)

6.1.1 Feature Group Arrangements and Manner of Provision

Switched Access Service is provided in four service categories of standard and optional features called Feature Groups. These are differentiated by their technical characteristics, e.g., line side vs. trunk side connection at the Telephone Company entry switch, and the manner in which an end user accesses them in originating calling, e.g., with or without an access code. Following is a brief description of each Feature Group arrangement.

(A) Feature Group A (FGA)

FGA Access, which is available to all customers, provides line side access to Telephone Company end office switches with an associated seven digit local telephone number for the customer's use in originating communications from and terminating communications to an Interexchange Carrier's Intrastate Service or a customer-provided intrastate communications capability. The customer must specify the Interexchange Carrier to which the FGA service is connected or, in the alternative, specify the means by which the FGA access communications is transported to another state. A more detailed description of FGA Access is provided in 6.2.1 following.

(B) Feature Group B (FGB)

FGB Access, which is available to all customers, provides trunk side access to Telephone Company end office switches with an associated uniform 950-10XX access code for the customer's use in originating communications from and terminating communications to an Interexchange Carrier's Intrastate Service or a customer-provided intrastate communications capability. The customer must specify the Interexchange Carrier to which the FGB service is connected or, in the alternative, specify the means by which the FGB access communications is transported to another state. A more detailed description of FGB Access is provided in 6.2.2 following.

6. Switched Access Service (Cont'd)

6.1 General (Cont'd)

6.1.1 Feature Group Arrangements and Manner of Provision (Cont'd)

(C) Feature Group C (FGC)

FGC Access provides trunk side access to Telephone Company end office switches for the customer's use in originating and terminating communications. Originating and terminating FGC Access is available to providers of MTS and WATS. Originating FGC Access is available to all customers when used to provide 500 and 900 NXX Access Service from end offices not equipped with equal access capabilities. Terminating FGC access is available to all customers other than providers of MTS and WATS when such access is used in conjunction with the provision of 500 and 900 NXX Access Service, but only for purposes of testing. This service is available in all end offices which are not equipped for Feature Group D End Office Switching.

Special Access Services utilized for connection with FGC at Telephone Company designated WATS Serving Offices as set forth in 7. following may be ordered separately by a customer other than the customer which orders the FGC Switched Access Service (i.e., a provider of MTS and WATS) for the provision of WATS Services. Special Access Services are ordered as set forth in 5.2 preceding. A more detailed description of FGC Access is provided in 6.2.3 following.

Operator Transfer Services will be provided over FGC switched access service trunks from the operator service location to the customer's premises. Where required by technical limitations, a separate FGC trunk group will be established for Operator Transfer Service. The operator service location will provide trunk answer and disconnect supervisory signaling to the customer.

6. Switched Access Service (Cont'd)

6.1 General (Cont'd)

6.1.1 Feature Group Arrangements and Manner of Provision (Cont'd)

(D) Feature Group D (FGD)

FGD Access, which is available to all customers, provides trunk side access to Telephone Company end office switches with an associated uniform 101XXXX access code for the customer's use in originating and terminating communications. Special Access Services utilized for connection with FGD at Telephone Company designated WATS Serving offices as set forth in 7. following may be ordered separately by a customer other than the customer which orders the FGD Switched Access Service for the provision of WATS or WATS-type services. Special Access Services are ordered as set forth in 5.2 preceding. A more detailed description of FGD Access is provided in 6.2.4 following.

Operator Transfer Services will be provided over FGC switched access service trunks from the operator service location to the customer's premises. Where required by technical limitations, a separate FGC trunk group will be established for Operator Transfer Service. The operator service location will provide trunk answer and disconnect supervisory signaling to the customer.

6. Switched Access Service (Cont'd)

6.1 General (Cont'd)

6.1.1 Feature Group Arrangements and Manner of Provision (Cont'd)

(E) Manner of Provision

Switched Access is furnished in either quantities of lines or trunks, or in busy hour minutes of capacity (BHMCs). FGA Access and FGB Access are furnished on a per-line or per-trunk basis respectively. FGC Access and FGD Access are furnished on a BHMC basis and on a per trunk basis as set forth in 5.2 preceding.

BHMCs are differentiated by type and directionality of traffic carried over a Switched Access Service arrangement. Differentiation of traffic among BHMC types is necessary for the Telephone Company to properly design Switched Access Service to meet the traffic carrying capacity requirement of the customer.

There are three major BHMC categories identified as: Originating, Terminating, and Directory Assistance. Originating BHMCs represent access capacity within a LATA for carrying traffic from the end user to the customer; and Terminating BHMCs represent access capacity within a LATA for carrying traffic from the customer to the end user; and, Directory Assistance BHMCs represent access capacity within a LATA for carrying Directory Assistance traffic from the customer to a Directory Assistance location. When ordering capacity for FGC Access or FGD Access, the customer must at a minimum specify such access capacity in terms of Originating BHMCs and/or Terminating BHMCs. Directory Assistance BHMCs are used for ordering Directory Assistance Access Service.

6. Switched Access Service (Cont'd)

6.1 General (Cont'd)

6.1.1 Feature Group Arrangements and Manner of Provision (Cont'd)

(E) Manner of Provision (Cont'd)

Because some customers will wish to further segregate their originating traffic into separate trunk groups, or because segregation may be required by network considerations Originating BHMCs are further categorized into Domestic, 500, 700, 8XX, 900, Operator, IDDD and Operator Transfer Services. Domestic BHMCs represent access capacity for carrying only domestic traffic other than 500, 700, 8XX, 900, Operator and Operator Transfer Services traffic; IDDD BHMCs represent access capacity for carrying only international traffic; and 500, 700, 8XX, 900, Operator and Operator Transfer Services BHMCs represent access capacity for carrying, respectively, only 500, 700, 8XX, 900, Operator, Operator Transfer Services traffic. When ordering such types of access capacity, the customer must specify Domestic, 500, 700, 8XX, 900, Operator, IDDD or Operator Transfer Services BHMCs.

6.1.2 Rate Categories

There are three rate categories which apply to Switched Access Service:

- Local Transport (described in 6.1.2(A) following)
- End Office (described in 6.1.2(B) following)
- Common Line (described in Sections 3. and 4. of the Windstream Nebraska, Inc., ACCESS TARIFF F.C.C. No. 1.

ACCESS SERVICE

6. Switched Access Service (Cont'd)

6.1 General (Cont'd)

6.1.2 Rate Categories (Cont'd)

The following diagram depicts a generic view of the components of Switched Access Service and the manner in which the components are combined to provide a complete Access Service.

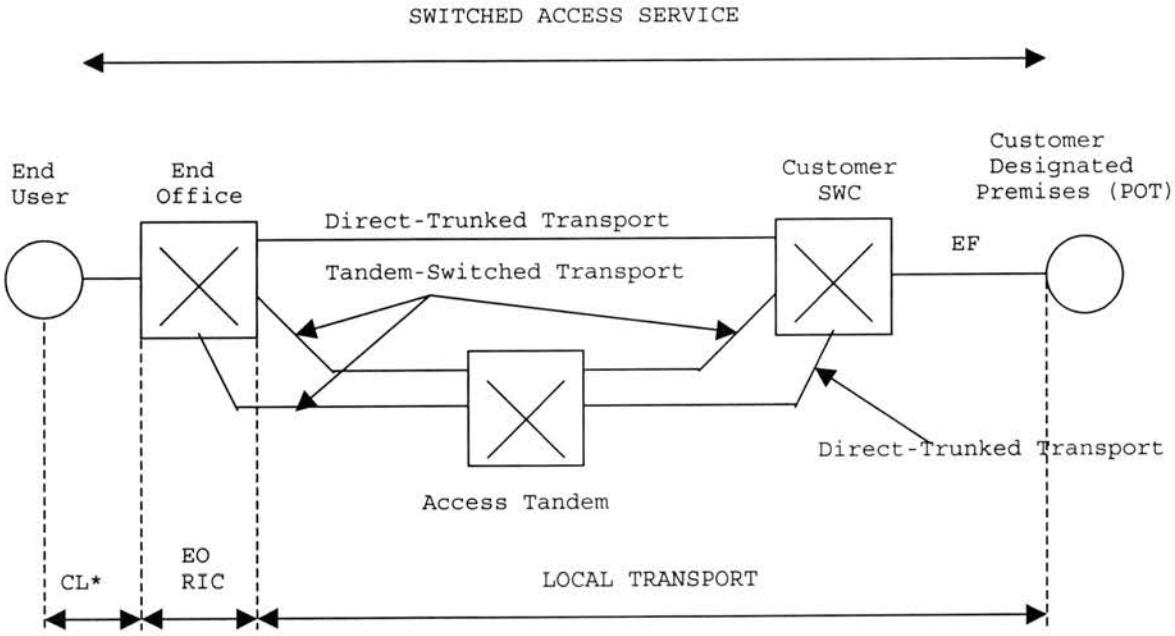

CL=Common Line
EO=End Office
EF=Entrance Facility
POT=Point of Termination
RIC=Residual Interconnection Charge
SWC=Serving Wire Center

Direct-Trunked Transport
- Direct-Trunked Facility
  - Direct-Trunked Termination

Tandem-Switched Transport
- Tandem-Switched Facility
- Tandem-Switched Termination
  - Tandem Switching Charge

*Carrier Common Line access is provided under Section 3. of the Windstream Nebraska, Inc., ACCESS TARIFF F.C.C. NO. 1.

6. Switched Access Service (Cont'd)

6.1 General (Cont'd)

6.1.2 Rate Categories (Cont'd)

(A) Local Transport

The Local Transport rate category provides the trans-mission facilities between the customer designated premises and the end office switch(es), which may be a Remote Switching Module(s), where the customer's traffic is switched to originate or terminate the customer's communications. Mileage measurement rules are set forth in 6.7.12 following and in this section.

Local Transport is a two-way voice frequency transmission path composed of facilities determined by the Telephone Company. The two-way voice frequency transmission path permits the transport of calls in the originating direction (from the end user end office switch to the customer designated premises) and in the terminating direction (from the customer designated premises to the end office switch), but not simultaneously. The voice frequency transmission path may be comprised of any form or configuration of plant capable of and typically used in the telecommunications industry for the transmission of voice and associated telephone signals within the frequency bandwidth of approximately 300 to 3000 Hz. The customer must specify the choice of facilities (i.e., Voice Grade 2-Wire, Voice Grade 4-Wire, or High Capacity DS1 or DS3) to be used in the provision of the Direct-Trunked Transport or Entrance Facility.

The customer must specify when ordering: (1) whether the service is to be directly routed to an end office switch or through an access tandem switch, (2) the type of Direct-Trunked Transport and whether it will overflow to Tandem-Switched Transport when service is directly routed to an end office, (3) the type of Entrance Facility, (4) the directionality of the service, and (5) when multiplexing is required, the hub(s) at which the multiplexing will be provided.

6. Switched Access Service (Cont'd)

6.1 General (Cont'd)

6.1.2 Rate Categories (Cont'd)

(A) Local Transport (Cont'd)

Additionally, when service is to be routed through an access tandem switch, the customer must specify whether the facility between the serving wire center and the tandem is to be provided as Direct-Trunked Transport or Tandem-Switched Transport.

When the customer has both Tandem-Switched Transport and Direct-Trunked Transport at the same end office, Alternate Traffic Routing as set forth in 6.3.1(N) following can be provided at the customer's option.

Direct-Trunked Transport is available at all tandems and at all end offices except those end offices identified in NATIONAL EXCHANGE CARRIER ASSOCIATION, INC. TARIFF F.C.C. NO. 4. as not having the capability to provide Direct-Trunked Transport. Direct-Trunked Transport is not available: (1) from end offices that provide equal access through a centralized equal access arrangement, (2) from end offices that lack recording or measurement capability, and (3) for originating 8XX calls from non-Service Switching Point (SSP) equipped end offices that can not accommodate direct trunking of originating 8XX calls.

6. Switched Access Service (Cont'd)

6.1 General (Cont'd)

6.1.2 Rate Categories (Cont'd)

(A) Local Transport (Cont'd)

Local Transport is provided at the rates and charges set forth in 6.8.1 following. The application of these rates with respect to individual Feature Groups is as set forth in 6.7.1(D) following.

The Local Transport Rate Category includes five classes of rate elements: (1) Entrance Facility, (2) Direct-Trunked Transport, (3) Tandem-Switched Transport, (4) Residual Interconnection Charge, and (5) Multiplexing.

(1) Entrance Facility

The Entrance Facility recovers a portion of the costs associated with a communications path between a customer designated premises and the serving wire center of that premises. Included as part of the Entrance Facility is a standard channel interface arrangement which defines the technical characteristics associated with the type of facilities to which the access service is to be connected at the customer designated premises and the type of signaling capability, if any.

Three types of Entrance Facility are available: (1) Voice Grade 2 or 4 wire (an analog channel with an approximate bandwidth of 300 to 3000 hz), (2) High Capacity DS1 (an isochronous serial digital channel with a rate of 1.544 Mbps), and (3) High Capacity DS3 (an isochronous serial digital channel with a rate of 44.736 Mbps). The minimum period for which a DS3 Entrance Facility is provided is twelve months.

6. Switched Access Service (Cont'd)

6.1 General (Cont'd)

6.1.2 Rate Categories (Cont'd)

(A) Local Transport (Cont'd)

(1) Entrance Facility (Cont'd)

One charge applies for each Entrance Facility that is terminated at a customer designated premises. This charge specified in 6.8.1 following will apply even if the customer designated premises and the serving wire center are collocated in a Telephone Company building.

A customer's Local Transport may be connected to the Entrance Facility of another customer, providing the other customer submits a Letter of Authorization for this connection and assumes full responsibility for the cost of the Entrance Facility.

(2) Direct-Trunked Transport

The Direct-Trunked Transport rate elements recover a portion of the cost associated with a communications path between the serving wire center and an end office or serving wire center and a tandem on circuits dedicated to the use of a single customer.

Direct-Trunked Transport is available to all tandems and to all end offices except those end offices identified in NATIONAL EXCHANGE CARRIER ASSOCIATION, INC. TARIFF F.C.C. NO. 4, WIRE CENTER INFORMATION as not having the capability to provide Direct-Trunked Transport.

6. Switched Access Service (Cont'd)

6.1 General (Cont'd)

6.1.2 Rate Categories (Cont'd)

(A) Local Transport (Cont'd)

(2) Direct-Trunked Transport (Cont'd)

Direct-Trunked Transport is not available: (1) from end offices that provide equal access through a centralized equal access arrangement, (2) from end offices that lack recording or measurement capability, and (3) for originating 8XX calls from non-Service Switching Point (SSP) equipped end offices that can not accommodate direct trunking of originating 8XX calls.

Three types of Direct-Trunked Transport are available: (1) Voice Grade (an analog channel with an approximate bandwidth of 300 to 3000 Hz), (2) High Capacity DS1 (an isochronous serial digital channel with a rate of 1.544 Mbps), and (3) High Capacity DS3 (an isochronous serial digital channel with a rate of 44.736 Mbps). The minimum period for which a High Capacity DS3 Direct-Trunked Transport is provided is twelve months.

High Capacity DS1 Direct-Trunked Transport can not be terminated at end offices that are not identified as hub offices that provide DS1 to Voice Grade multiplexing or are not electronic end offices. Additionally, DS3 Direct-Trunked Transport can not be terminated at end offices that are not identified as hub offices that provide DS3 to DS1 multiplexing. Offices that provide multiplexing are identified in NATIONAL EXCHANGE CARRIER ASSOCIATION, INC. TARIFF F.C.C. NO. 4, WIRE CENTER INFORMATION.

6. Switched Access Service (Cont'd)

6.1 General (Cont'd)

6.1.2 Rate Categories (Cont'd)

(A) Local Transport (Cont'd)

(2) Direct-Trunked Transport (Cont'd)

Direct-Trunked Transport rates consist of a Direct-Trunked Facility rate specified in 6.8.1 following which is applied on a per mile basis and a Direct-Trunked Termination rate which is applied at each end of each measured segment of the Direct-Trunked Facility (e.g., at the end office, hub, tandem, and serving wire center). When the Direct-Trunked Facility mileage is zero, neither the Direct-Trunked Facility rate nor the Direct-Trunked Termination rate will apply.

The Direct-Trunked Facility rate recovers a portion of the costs of the transmission facilities, including intermediate transmission circuit equipment between the end points of the interoffice circuits.

The Direct-Trunked Termination rate specified in 6.8.1 following recovers a portion of the costs of the circuit equipment that is necessary for the termination of each end of the Direct-Trunked Facility.

6. Switched Access Service (Cont'd)

6.1 General (Cont'd)

6.1.2 Rate Categories (Cont'd)

(A) Local Transport (Cont'd)

(3) Tandem-Switched Transport

The Tandem-Switched Transport rate elements recover a portion of the costs associated with a communications path between a serving wire center and an end office or between a tandem and an end office on circuits that are switched at a tandem switch.

Tandem-Switched Transport rates consist of a Tandem Switching Charge rate, a Tandem-Switched Facility rate, and a Tandem-Switched Termination rate.

The Tandem Switching Charge rate recovers a portion of the costs of switching traffic through an access tandem. The Tandem Switching Charge rate specified in 6.8.1 following is applied on a per access minute per tandem basis for all originating and all terminating minutes of use switched at the tandem. Tandem locations are identified in NATIONAL EXCHANGE CARRIER ASSOCIATION, INC. TARIFF F.C.C. NO. 4, WIRE CENTER INFORMATION.

The Tandem-Switched Facility rate recovers a portion of the costs of the transmission facilities, including intermediate transmission circuit equipment between the end points of the interoffice circuits.

6. Switched Access Service (Cont'd)

6.1 General (Cont'd)

6.1.2 Rate Categories (Cont'd)

(A) Local Transport (Cont'd)

(3) Tandem-Switched Transport (Cont'd)

The Tandem-Switched Facility rate specified in 6.8.1 following is applied on a per access minute per mile basis for all originating and terminating minutes of use routed over the facility. Mileage for Tandem-Switched Facility is measured in segments, as set forth in 6.7.12 following.

The Tandem-Switched Termination rate recovers a portion of the costs of the circuit equipment necessary for the termination of each end of each measured segment of the Tandem-Switched Facility. The Tandem-Switched Termination rate specified in 6.8.1 following is applied on a per access minute per measured segment of Tandem-Switched Facility basis for all originating and terminating minutes of use routed over the facility. When the Tandem-Switched Facility mileage is zero, the Tandem-Switched Facility rate will not apply; however, the Tandem-Switched Termination rate will apply.

6. Switched Access Service (Cont'd)

6.1 General (Cont'd)

6.1.2 Rate Categories (Cont'd)

(A) Local Transport (Cont'd)

(4) Residual Interconnection Charge

The Residual Interconnection Charge rate recovers the costs associated with Local Transport that are not recovered by the Entrance Facility, Direct-Trunked Transport, Tandem-Switched Transport, or Multiplexing. The Residual Interconnection Charge specified in 6.8.1 following applies at the end office to all switched access minutes of use (i.e., both Tandem-Switched and Direct-Trunked).

(5) Multiplexing

DS3 to DS1 Multiplexing charges specified in 6.8.1 following apply when a High Capacity DS3 Entrance Facility or High Capacity DS3 Direct-Trunked Facility is connected with High Capacity DS1 Direct-Trunked Transport. The DS3 to DS1 multiplexer will convert a 44.736 Mbps channel to 28 DS1 channels using digital time division multiplexing.

DS1 to Voice Grade Multiplexing charges specified in 6.8.1 following apply when a High Capacity DS1 Entrance Facility or High Capacity DS1 Direct-Trunked Facility is connected with Voice Grade Direct-Trunked Transport. However, a DS1 to Voice Grade Multiplexing charge does not apply when a High Capacity DS1 Entrance Facility or High Capacity DS1 Direct-Trunked Transport is terminated at an electronic end office and only Switched Access Service is provided over the DS1 facility (i.e., Voice Grade Special Access channels are not derived). The DS1 to Voice Grade multiplexer will convert a 1.544 Mbps channel to 24 Voice Grade channels.

Multiplexing is only available at wire centers identified in NATIONAL EXCHANGE CARRIER ASSOCIATION, INC. TARIFF F.C.C. NO. 4, WIRE CENTER INFORMATION.

ACCESS SERVICE

6. Switched Access Service (Cont'd)

6.1 General (Cont'd)

6.1.2 Rate Categories (Cont'd)

(A) Local Transport (Cont'd)

6. Switched Access Service (Cont'd)

6.1 General (Cont'd)

6.1.2 Rate Categories (Cont'd)

(A) Local Transport (Cont'd)

(6) Interface Groups

Ten Interface Groups are provided for terminating the Local Transport Entrance Facility at the customer's designated premises. Each Interface Group provides a specified premises interface (e.g., two-wire, four-wire, DS1, etc.). Where transmission facilities permit, and at the option of the customer, the Entrance Facility may be provided with optional features as set forth in (7) following.

As a result of the customer's access order and the type of Telephone Company transport facilities serving the customer's designated premises, the need for signaling conversions or two-wire to four-wire conversions, or the need to terminate digital or high frequency facilities in channel bank equipment may require that Telephone Company equipment be placed at the customer's designated premises. For example, if a voice frequency interface is ordered by the customer and the Telephone Company facilities serving the customer's designated premises are digital, then Telephone Company channel bank equipment must be placed at the customer's designated premises in order to provide the voice frequency interface ordered by the customer.

Technical specifications concerning the available interface groups are set forth in 15.1 following.

6. Switched Access Service (Cont'd)

6.1 General (Cont'd)

6.1.2 Rate Categories (Cont'd)

(A) Local Transport (Cont'd)

(7) Nonchargeable Optional Features

Where transmission facilities permit, the Telephone Company will, at the option of the customer, provide the following nonchargeable optional features in association with Local Transport.

(a) Supervisory Signaling

Where the transmission parameters permit, and where signaling conversion is required by the customer to meet its signaling capability, the customer may order an optional supervisory signaling arrangement for each transmission path provided as set forth in 15.1.12 following.

(b) Customer Specified Entry Switch Receive Level

This feature allows the customer to specify the receive transmission level at the first point of switching. The range of transmission levels which may be specified is described in Technical Reference TR-NPL-000334. This feature is available with Interface Groups 2 through 10 for Feature Groups A and B.

6. Switched Access Service (Cont'd)

6.1 General (Cont'd)

6.1.2 Rate Categories (Cont'd)

(A) Local Transport (Cont'd)

(7) Nonchargeable Optional Features (Cont'd)

(c) Customer Specification of Local Transport Termination

This option allows the customer to specify, for Feature Group B routed directly to an end office or access tandem, a four-wire termination of the Local Transport at the entry switch in lieu of a Telephone Company selected two-wire termination. This option is available only when the Feature Group B arrangement is provided with Type B Transmission Specifications.

(d) Customer Subscription to CCSNC

When a customer subscribes to Common Channel Signaling (SS7) Network Connection Service (CCSNC Service), the following optional features are made available and are described in 6.3.1 following.

- Signaling System 7 (SS7) Signaling
- Calling Party Number
- Carrier Selection Parameter
- Charge Number Parameter

(8) Chargeable Optional Features

(a) Common Channel Signaling, Signaling System 7 (CCS/SS7) Network Connection (CCSNC) Service

This service provides a signaling path between a customer's designated Signaling Point of Interface (SPOI) and a Telephone Company's Signaling Transfer Point (STP). CCSNC is provided as set forth in 6.3.3(C) following.

6. Switched Access Service (Cont'd)

6.1 General (Cont'd)

6.1.2 Rate Categories (Cont'd)

(A) Local Transport (Cont'd)

(8) Chargeable Optional Features (Cont'd)

(b) CIC and OZZ Signaling Information (COSI)

This option is end office-generated signaling which provides the Carrier Identification Code (CIC) and the OZZ digits needed to perform tandem switching functions for switched transport services. This option is only available with the Feature Group D trunks when directly routed to an equal access end office switch. It is not available from the Telephone Company's access tandem. CIC and OZZ Signaling Information is provided as set forth in 6.3.3(D) following, via multifrequency (MF) address signaling or, where technically feasible, via out of band CCS/SS7 signaling.

(c) Clear Channel Capability (CCC)

CCC is a Feature Group D (FGD) Direct-Trunked Transport arrangement that allows a customer to transport 1.536 Mbps information rate signals over a 1.544 Mbps High Capacity DS1 channel or over a 1.544 Mbps High Capacity DS1 channel derived from a multiplexed 44.736 Mbps High Capacity DS3 channel with no constraint on the quantity or sequence of one and zero bits. This arrangement requires the customer interface to conform to Bipolar with Eight Zero Substitution (B8ZS) line code as described in Technical Reference TR-NRL-000054 and Technical Reference TR-INS-000342. The CCC optional feature is provided as set forth in 6.3.3(F) following.

(B) End Office

The End Office rate category provides the local end office switching and end user termination functions necessary to complete the transmission of Switched Access communications to and from the end users served by the local end office. The End Office rate category includes the Switching and Information (i.e., Directory Assistance) rate elements. The components which make up the Switching rate element include Local Switching, Line Termination and Intercept. End Office rate elements are set forth in 6.8.2 following. The application of the Switching rate element with respect to individual Feature Groups is as set forth in 6.7.1 (D) following.

6. Switched Access Service (Cont'd)

6.1 General (Cont'd)

6.1.2 Rate Categories (Cont'd)

(B) End Office (Cont'd)

(1) Switching

(a) Local Switching

The Local Switching rate element provides for the use of end office switching equipment. It is divided into two distinct categories, i.e., LS1 and LS2. The first category, LS1, provides local dial switching for Feature Groups A and B except for Feature Group B when utilized to provide MTS/WATS service. The second category, LS2, provides local dial switching for Feature Groups C and D and for FGB when utilized to provide MTS/WATS service.

Where end offices are appropriately equipped, international dialing may be provided as a cap ability associated with LS2 which provides local dial switching for Feature Groups C and D. International dialing provides the capability of switching international calls with service prefix and address codes having more digits than are capable of being switched through a standard FGC or FGD equipped end office.

Rates for LS1 and LS2 are set forth in 6.8.2 (A) following. The application of these rates with respect to individual Feature Groups is as set forth in 6.7.1(D) following.

There are two types of local switching functions, i.e., Common Switching functions and Transport Termination functions. These are described in (i) and (ii) following.

(i) Common Switching

Common Switching provides the local end office switching functions associated with the various access (i.e., Feature Group) switching arrangements. The Common Switching arrangements provided for the various Feature Group arrangements are described in 6.2 following.

6. Switched Access Service (Cont'd)

6.1 General (Cont'd)

6.1.2 Rate Categories (Cont'd)

(B) End Office (Cont'd)

(1) Switching (Cont'd)

(a) Local Switching (Cont'd)

(i) Common Switching (Cont'd)

Included as part of Common Switching are various nonchargeable optional features which the customer can order to meet the customer's specific communications requirements. These optional features are described in 6.3.1 following.

(ii) Transport Termination

Transport Termination provides for the line or trunk side arrangements which terminate the Local Transport facilities. Included as part of Transport Termination are various nonchargeable optional termination arrangements. These optional terminating arrangements are described in 6.3.2 following.

The number of Transport Terminations provided will be determined by the Telephone Company as set forth in 6.5.6 following.

(b) Line Termination

The Line Termination provides the terminations for the end user lines terminating in the local end office. There are two types of Line Terminations, i.e., Common Line Terminations and Special Access Service Terminations utilized in the provision of WATS or WATS-type services at Telephone Company designated WATS Serving Offices.

The above Special Access Service Terminations are differentiated by line side vs. trunk side terminations. In addition, there are various types of originating and terminating line side terminations depending on the type of signaling associated with

6. Switched Access Service (Cont'd)

6.1 General (Cont'd)

6.1.2 Rate Categories (Cont'd)

(B) End Office (Cont'd)

(1) Switching (Cont'd)

(b) Line Termination (Cont'd)

the Special Access Service. Line side terminations are available with either dial pulse or dual tone multifrequency address signaling.

(c) Intercept

The Intercept provides for the termination of a call at a Telephone Company Intercept operator or recording. The operator or recording tells a caller why a call, as dialed, could not be completed, and if possible, provides the correct number.

(2) Directory Assistance Information Surcharge

Directory Assistance Information Surcharge rates are assessed to a customer based on the total number of access minutes. Directory Assistance Information Surcharge rates are as set forth in 6.8.2 (B) following. The application of these rates with respect to individual Feature Groups is as set forth in 6.7.1(D) following.

The number of end office switching transmission paths will be determined as set forth in 6.5.5 following.

6. Switched Access Service (Cont'd)

6.1 General (Cont'd)

6.1.2 Rate Categories (Cont'd)

(C) Chargeable Optional Features

Where facilities permit, the Telephone Company, will at the option of the customer, provide the following chargeable optional features.

(1) NXX Translation for 500 or 900 Access Service

The NXX Translation rate element for 500 or 900 Access Service provides for customer identification of calls dialed by end users of the form 1+SAC+NXX-XXXX. The NXX codes are assigned to specific customers in conformance with the North American Numbering Plan (NANP). NXX code assignment(s) will be made by the Bellcore NANP Coordinator. The Telephone Company will use the NXX code to identify the customer to whose point of termination the traffic is to be delivered, (i.e., at appropriately equipped electronic end offices, access tandems or through contracted arrangements with other parties.) NXX translation for 500 or 900 service is provided at the ordered end offices. It is then the responsibility of the customer to do any further translation the customer deems necessary and route the call. Customer assigned NXX codes which have not been ordered will be blocked.

(a) 500 or 900 NXX Translation

A nonrecurring charge, as set forth in 6.8.3 following, is associated with 500 or 900 Translation. This nonrecurring charge is assessed by the Telephone Company on a per SAC order basis regardless of the number of NXX codes specified on the order.

The description and application of this service with respect to Feature Group C and Feature Group D is as set forth in 6.7.1(C)(2) and 6.7.1(D) following.

6. Switched Access Service (Cont'd)

6.1 General (Cont'd)

6.1.2 Rate Categories (Cont'd)

(C) Chargeable Optional Features (Cont'd)

(2) 8XX Data Base Access Service

8XX Data Base Access Service provides for customer identification of calls dialed by end users, based on the dialed 8XX number in the form 1+8XX+NXX-XXXX. The 8XX numbers are assigned to 8XX service subscribers in conformance with the North American Numbering Plan (NANP). 8XX number assignment will be made by the 800 Service Management System (SMS/8XX) Administrator. The Telephone Company will perform carrier selection for each 8XX number call by querying a data base to determine the customer to whose point of termination the call is to be delivered and includes area of service routing which allows routing of 8XX calls by telephone companies to different interexchange carriers based on the Local Access Transport Area (LATA) in which the call originates. Unless the customer has ordered 8XX data base optional vertical services, it is then the responsibility of the customer to perform any further translation the subscriber deems necessary and route the call. Calls to 8XX number, for which a data base query returns a carrier identification for a carrier that has not ordered Switched Access Service, will be blocked.

6. Switched Access Service (Cont'd)

6.1 General (Cont'd)

6.1.2 Rate Categories (Cont'd)

(C) Chargeable Optional Features (Cont'd)

(2) 8XX Data Base Access Service (Cont'd)

In addition to the carrier selection function performed, the data base can be used to provide various vertical service features. Charges for Vertical Service Features are in addition to Carrier Selection charges. These optional vertical features include:

- POTS translation of 8XX numbers (which is generally necessary for the routing of 8XX calls)
- Other Vertical Service Features (This charge is in addition to the POTS Translation Charge, if applicable)

  - Alternate POTS translation (which allows subscribers to vary the routing of 8XX calls based on factors such as time of day, day of week, specific dates, originating NPA-NXX-XXXX and/or percent allocation)
  - Multiple carrier routing (which allows subscriber to route to different carriers based on factors such as time of day, day of week, specific dates, originating NPA-NXX-XXXX and/or percent allocation)
  - Call validation (ensuring that calls originate from subscribed service areas)

When Other Vertical Service Feature charge is applicable, only one charge will be assessed, regardless of the number of Other Vertical Service Features provided.

6. Switched Access Service (Cont'd)

6.1 General (Cont'd)

6.1.2 Rate Categories (Cont'd)

(C) Chargeable Optional Features (Cont'd)

(2) 8XX Data Base Access Service (Cont'd)

(a) 8XX Data Base Queries

8XX data base charges, as set forth in 6.8.4 following, are associated with the carrier selection and vertical service features. The 8XX data base charges will be assessed by the Telephone Company on a per completed 8XX data base query basis even if the Telephone Company does not actually deliver the associated 8XX call to the customer or Interexchange Carrier (IXC).

An Independent Telephone Company (ITC) that subtends the Company's Service Switching Point (SSP) may elect, by notifying the Company in writing, to have the Company bill the ITC the 8XX data base query charges associated with 8XX calls originating from the ITC. If the ITC so elects and the Company can identify the originating end office for the 8XX data base queries associated with 8XX calls originating from the ITC, the ITC will be assessed the 8XX data base query charges, per completed query, for those 8XX calls that originate from the ITC. In this case, the ITC is responsible for billing the interexchange carriers (IXC) for 8XX data base charges based on the ITC's tariffed rate.

If the Company is unable to identify, for any reason, the originating end office for the 8XX data base queries (carrier selection and/or vertical features) associated with 8XX calls originating from a particular ITC that subtends the Company's SSP, the Company will bill the IXC directly for the 8XX data base queries.

6. Switched Access Service (Cont'd)

6.1 General (Cont'd)

6.1.2 Rate Categories (Cont'd)

(C) Chargeable Optional Features (Cont'd)

(2) 8XX Data Base Access Service (Cont'd)

(a) 8XX Data Base Queries (Cont'd)

If the ITC subtending the Company's SSP does not elect to have the Company bill the ITC the 8XX data base query charges, the Company will bill the IXC the 8XX data base query charges associated with 8XX calls originating from the ITC. In this case, the ITC will not bill the IXC 8XX data base query charges.

The description and application of this service with respect to Feature Group C and Feature Group D is as set forth in 6.7.1(D) following.

6. Switched Access Service (Cont'd)

6.1 General (Cont'd)

6.1.2 Rate Categories (Cont'd)

(C) Chargeable Optional Features (Cont'd)

(3) Billing Name and Address

The Company will provide to telecommunications service providers or to the authorized billing agents of telecommunications service providers, the billing name and address (BNA) of the Company's subscribers with listed telephone numbers who use the Company's calling card or who authorize collect and third party calls to pay for a telecommunications service provider's services.

The Company will also disclose the BNA of the Company's subscribers with unlisted and nonpublished numbers, unless the unlisted or nonpublished subscriber affirmatively requests that its BNA not be disclosed. The Company will presume that unlisted and nonpublished subscribers consent to disclosure and use of their BNA if the subscriber does not make this affirmative request.

The Company will not disclose billing name and address information to any party other than a telecommunications service provider or an authorized billing and collection agent of a telecommunications provider.

No telecommunications service provider or authorized billing and collection agent of a telecommunications service provider shall use billing name and address information for any purpose other than the following:

(a) Billing customers for using telecommunications services of that service provider and collecting amounts due.

(b) Any purpose associated with the "equal access" requirements.

(c) Verification of service orders of new customers, identification of customers who have moved to a new address, fraud prevention, and similar nonmarketing purposes.

6. Switched Access Service (Cont'd)

6.1 General (Cont'd)

6.1.2 Rate Categories (Cont'd)

(C) Chargeable Optional Features (Cont'd)

(3) Billing Name and Address (Cont'd)

In no case shall any telecommunications service provider or authorized billing and collection agent of a telecommunications service provider disclose the billing name and address information of any subscriber to any third party, except that a telecommunications service provider may disclose billing name and address information to its authorized billing and collection agent.

Requests for BNA on given telephone numbers will be accepted by the Company's Interexchange Carrier Service Center (ICSC) via letter or facsimile on letterhead of the telecommunications service provider or an authorized billing agent. The Company shall, barring any unforeseen circumstances, provide BNA information to the requesting party via first class U.S. Mail or facsimile within thirty (30) days of receipt of the BNA request.

The rates and charges for the provision of BNA, as set forth in 6.8.5 following, are associated with the matching of billing name and address to the given telephone number. The minimum monthly charge for the provisioning of BNA is $15.00.

ACCESS SERVICE

6. Switched Access Service (Cont'd)

6.1 General (Cont'd)

6.1.2 Rate Categories (Cont'd)

(C) Chargeable Optional Features (Cont'd)

(4) Operator Transfer Services (Cont'd)

Operator Transfer Service may be provided with Feature Group C or Feature Group D Switched Access Service at Telephone Company designated Operator Services location. Operator Transfer Service is an originating service. The rate is assessed per 0- call transferred to a customer's operator. An 0- call is considered transferred when the Telephone Company Operator activates the switch transferring the call to the designated customer and the customer acknowledges receipt.

In addition to the Operator Transfer Service charge described above and in 6.3.3 following, Feature Group C or Feature Group D Switched Access rates and charges as set forth in 6.2.3 and 6.2.4 following and Carrier Common Line Charges set forth in 3.8.5 preceding will apply per minute of use for Operator Transfer Service.

Operator Transfer Service charges, provided for in this tariff, are applied only to those calls actually transferred by the Telephone Company to the customer's operator.

6. Switched Access Service (Cont'd)

6.1 General (Cont'd)

6.1.3 Special Facilities Routing

Any customer may request that the facilities used to provide Switched Access Service be specially routed. The regulations, rates and charges for Special Facilities Routing (i.e., Avoidance, Diversity and Cable-Only) are set forth in 11. following.

6.1.4 Design Layout Report

At the request of the customer, the Telephone Company will provide to the customer the makeup of the facilities and services provided from the customer's premises to the first point of switching. This information will be provided in the form of a Design Layout Report. The Design Layout Report will be provided to the customer at no charge, and will be reissued or updated whenever these facilities are materially changed.

6.1.5 Testing

(A) Acceptance Testing

At no additional charge, the Telephone Company will, at the customer's request, cooperatively test at the time of installation, the following parameters: loss, C-notched noise, C-message noise, 3-tone slope, d.c. continuity and operational signaling. When the Local Transport is provided with Interface Groups 2 through 10, and the Transport Termination is two-wire (i.e., there is a four-wire to two-wire conversion in Local Transport), balance parameters (equal level echo path loss) may also be tested.

(B) Routine Testing

At no additional charge, the Telephone Company will, at the customer's request, test after installation on an automatic or manual basis, 1004 Hz loss, C-message noise and Balance (Return loss).

In the case of automatic testing, the customer shall provide remote office test lines and 105 test lines with associated responders or their functional equivalent.

6. Switched Access Service (Cont'd)

6.1 General (Cont'd)

6.1.5 Testing (Cont'd)

(B) (Cont'd)

The frequency of these tests will be that which is mutually agreed upon by the customer and the Telephone Company, but shall consist of not less than quarterly 1004 Hz Loss and C-message noise tests and an annual Balance test. Trunk test failures requiring customer participation for trouble resolution will be provided to the customer on an as-occurs basis.

Additional tests may be ordered as set forth in 13.3.4 following. Charges for these additional tests are set forth in 13.3.4(C) following.

6.1.6 Ordering Options and Conditions

Switched Access Service is ordered under the Access Order provisions set forth in 5.2 preceding. Also, included in that section are other charges which may be associated with ordering Switched Access Service (e.g., Service Date Change Charges, Cancellation Charges, etc.).

6. Switched Access Service (Cont'd)

6.2 Provision and Description of Switched Access Service Feature Groups

Switched Access Service is provided in four different Feature Group arrangements. The provision of each Feature Group requires Local Transport facilities including an Entrance Facility where required, and the appropriate End Office functions. In addition, Special Access Service may, at the option of the customer, be connected with Feature Group C or Feature Group D at Telephone Company designated WATS Serving Offices.

There are three specific transmission specifications (i.e., Types A, B and C) that have been identified for the provision of Feature Groups. The technical specifications for the Entrance Facility and Direct-Trunked Transport are the same as those set forth in Section 7 following for Voice Grade and High Capacity Services. The specifications provided are dependent on the Interface Group and the routing of the service, i.e., whether the service is routed directly to the end office or via an access tandem. The parameters for the transmission specifications are set forth in 15.2.1 following.

Feature Groups are arranged for either originating, terminating or two-way calling, based on the customer end office switching capacity ordered. Originating calling permits the delivery of calls from Telephone Exchange Service locations to the customer designated premises. Terminating calling permits the delivery of calls from the customer designated premises to Telephone Exchange Service locations. Two-way calling permits the delivery of calls in both directions, but not simultaneously. The Telephone Company will determine the type of calling to be provided unless the customer requests that a different type of directional calling is to be provided. In such cases, the Telephone Company will work cooperatively with the customer to determine the directionality.

There are various nonchargeable optional features available with the Feature Groups. These additional optional features are provided as Local Transport, Common Switching or Transport Termination, 8XX Data Base Access Service, 900 or 500 NXX Access Service and Operator Transfer Service.

Following are detailed descriptions of each of the available Feature Groups. Each Feature Group is described in terms of its specific physical characteristics and calling patterns, the transmission specifications with which it is provided, the optional features available for use with it and the standard testing capabilities.

The Common Switching and Transport Termination optional features, which are described in 6.3 following, unless specifically stated otherwise, are available at all Telephone Company end office switches.

6. Switched Access Service (Cont'd)

6.2 Provision and Description of Switched Access Service Feature Groups (Cont'd)

6.2.1 Feature Group A (FGA)

(A) Description

(1) FGA is provided in connection with Telephone Company electronic and electromechanical end offices. At the option of the customer, FGA is provided on a single or multiple line group basis and is arranged for originating calling only, terminating calling only, or two-way calling.

(2) FGA provides a line side termination at the first point of switching (dial tone office). The line side termination will be provided with either ground start supervisory signaling or loop start supervisory signaling. The type of signaling is at the option of the customer.

(3) The Telephone Company shall select the first point of switching, within the selected LATA, at which the line side termination is to be provided unless the customer requests a different first point of switching and Telephone Company facilities and measurement capabilities, where necessary, are available to accommodate such a request.

(4) A seven digit local telephone number assigned by the Telephone Company is provided for access to FGA switching in the originating direction. The seven digit local telephone number will be associated with the selected end office switch and is of the form NXX-XXXX.

If the customer requests a specific seven digit telephone number that is not currently assigned, and the Telephone Company can, with reasonable effort, comply with that request, the requested number will be assigned to the customer.

6. Switched Access Service (Cont'd)

6.2 Provision and Description of Switched Access Service Feature Groups (Cont'd)

6.2.1 Feature Group A (FGA) (Cont'd)

(A) Description (Cont'd)

(5) FGA switching, when used in the terminating direction, is arranged with dial tone start-dial signaling. When used in the terminating direction FGA switching may, at the option of the customer, be arranged for dial pulse or dual tone multifrequency address signaling, subject to availability of equipment at the first point of switching. When FGA switching is provided in a hunt group or uniform call distribution arrangement, all FGA switching will be arranged for the same type of address signaling.

(6) No address signaling is provided by the Telephone Company when FGA Switching is used in the originating direction. Address signaling in such cases, if required by the customer, must be provided by the customer's end user using inband tone signaling techniques. Such inband tone address signals will not be regenerated by the Telephone Company and will be subject to the ordinary transmission capabilities of the Local Transport provided.

(7) FGA switching, when used in the terminating direction, may be used to access valid NXXs in the LATA, local operator service (0- and 0+), Directory Assistance (411 where available and 555-1212), emergency reporting service (911 where available), exchange telephone repair (611 where available), time or weather announcement services of the Telephone Company, community information services of an information service provider, and other customers' services (by dialing the appropriate digits). Charges for FGA terminating calls requiring operator assistance or calls to 611 or 911 will only apply where sufficient call details are available. Additional non-access charges will also be billed on a separate account for (1) an operator surcharge, as set forth in the local

6. Switched Access Service (Cont'd)

6.2 Provision and Description of Switched Access Service Feature Groups (Cont'd)

6.2.1 Feature Group A (FGA) (Cont'd)

(A) Description (Cont'd)

(7) (Cont'd)

exchange tariffs, for local operator assistance (0- and 0+) calls, (2) calls to certain community information services, for which rates are applicable under Telephone Company exchange service tariffs, e.g., 976 (DIAL-IT) Network Services, and, (3) calls from a FGA line to another customer's service in accordance with that customer's applicable service rates when the Telephone Company performs the billing function for that customer. For calls to Directory Assistance (411 and 555-1212, whichever is available), Local Transport rates for FGA Switched Access Service will not apply.

(8) When a FGA switching arrangement for an individual customer (a single line or entire hunt group) is discontinued at an end office, an intercept announcement is provided. This arrangement provides, for a limited period of time, an announcement that the service associated with the number dialed has been disconnected.

(9) FGA will be provisioned over an Entrance Facility from the customer's premises to the customer's serving wire center.

FGA service, when used in the originating or terminating direction, will be provisioned as Direct-Trunked Transport from the customer's serving wire center to the first point of switching and provisioned as Tandem-Switched Transport from the first point of switching to the originating or terminating end office.

(B) Optional Features

(1) Common Switching Optional Features

(a) Hunt Group Arrangement
(b) Uniform Call Distribution Arrangement
(c) Nonhunting Number for Use with Hunt Group Arrangement or Uniform Call Distribution Arrangement
(d) Call Denial
(e) Service Code Denial

6. Switched Access Service (Cont'd)

6.2 Provision and Description of Switched Access Service Feature Groups (Cont'd)

6.2.1 Feature Group A (FGA) (Cont'd)

(B) Optional Features (Cont'd)

(2) Transport Termination Optional Features

(a) Two-way operation with dial pulse address signaling and loop start supervisory signaling
(b) Two-way operation with dial pulse address signaling and ground start supervisory signaling
(c) Two-way operation with dual tone multifrequency address signaling and loop start supervisory signaling
(d) Two-way operation with dual tone multifrequency address signaling and ground start supervisory signaling
(e) Terminating operation with dial pulse address signaling and loop start supervisory signaling
(f) Terminating operation with dial pulse address signaling and ground start supervisory signaling
(g) Terminating operation with dual tone multifrequency address signaling and loop start supervisory signaling
(h) Terminating operation with dual tone multifrequency address signaling and ground start supervisory signaling
(i) Originating operation with loop start supervisory signaling
(j) Originating operation with ground start supervisory signaling

(3) Local Transport Optional Features

(a) Supervisory Signaling (as set forth in 6.1.2(A)(7)(a) preceding)
(b) Customer Specified Entry Switch Receive Level (as set forth in 6.1.2(A)(7)(b) preceding)
(c) Customer Specification of Local Transport Termination (as set forth in 6.1.2(A)(7)(c) preceding)

6. Switched Access Service (Cont'd)

6.2 Provision and Description of Switched Access Service Feature Groups (Cont'd)

6.2.1 Feature Group A (FGA) (Cont'd)

(B) Optional Features (Cont'd)

(4) Certain other features which may be available in connection with Feature Group A are provided under the Telephone Company's local and/or general exchange service tariffs. These are:

(a) Speed Calling
(b) Remote Call Forwarding
(c) Bill Number Screening
(d) IntraLATA extensions

(C) Transmission Specifications

FGA is provided with either Type B or Type C Trans mission Specifications. The specifications for the associated parameters are guaranteed to the first point of switching. Type C Transmission Specifications are provided with Interface Group 1 and Type B is provided with Interface Groups 2 through 10. Type DB Data Transmission Parameters are provided with FGA to the first point of switching.

(D) Testing Capabilities

FGA is provided, in the terminating direction where equipment is available, with seven digit access to balance (100 type) test line and milliwatt (102 type) test line. In addition to the tests described in 6.1.5 preceding which are included with the installation of service, and as ongoing routine testing, Additional Cooperative Acceptance Testing and Additional Manual Testing are available as set forth in 13.3.4 following.

6. Switched Access Service (Cont'd)

6.2 Provision and Description of Switched Access Service Feature Groups (Cont'd)

6.2.2 Feature Group B (FGB)

(A) Description

(1) FGB, when directly routed to an end office (i.e., provided without the use of an access tandem switch), is provided at appropriately equipped Telephone Company electronic end office switches. When provided via Telephone Company designated electronic access tandem switches, FGB switching is provided at Telephone Company electronic and electromechanical end office switches.

(2) FGB is provided as trunk side switching through the use of end office or access tandem switch trunk equipment. The switch trunk equipment is provided with wink start start-pulsing signals and answer and disconnect supervisory signaling.

(3) FGB switching is provided with multifrequency address signaling in both the originating and terminating directions. Except for FGB switching provided with the automatic number identification (ANI) or rotary dial station signaling arrangements as set forth in 6.3 following, any other address signaling in the originating direction, if required by the customer, must be provided by the customer's end user using inband tone signaling techniques. Such inband tone address signals will not be regenerated by the Telephone Company and will be subject to the ordinary transmission capabilities of the Local Transport provided.

(4) The access code for FGB switching is a uniform access code. The form of the uniform access code is 950-10XX for carriers. One uniform access code will be assigned to the customer for the customer's domestic communications and another will be assigned to the customer for its international communications, if required. These uniform access codes will be the assigned access numbers of all FGB switched access service provided to the customer by the Telephone Company.

6. Switched Access Service (Cont'd)

6.2 Provision and Description of Switched Access Service Feature Groups (Cont'd)

6.2.2 Feature Group B (FGB) (Cont'd)

(A) Description (Cont'd)

(5) FGB switching, when used in the terminating direction, may be used to access valid NXXs in the LATA, time or weather announcement services of the Telephone Company, community information services of an information service provider and other customers' services (by dialing the appropriate digits). When directly routed to an end office, only those valid NXX codes served by that end office may be accessed. When routed through an access tandem, only those valid NXX codes served by end offices subtending the access tandem may be accessed. The customer will also be billed additional non-access charges for calls to certain community information services for which rates are applicable under Telephone Company exchange service tariffs, e.g., 976 (DIAL-IT) Network Service. Additionally, non-access charges will also be billed for calls from a FGB trunk to another customer's service in accordance with that customer's applicable service rates when the Telephone Company performs the billing function for that customer. Calls in the terminating direction will not be completed to 950-10XX access codes, local operator assistance (0- and 0+), Directory Assistance (411 and 555-1212), service codes 611 and 911 or 101XXXX access codes. Calls will be completed to Directory Assistance (NPA-555-1212 or 555-1212) when FGB switching is combined with Directory Assistance switching. FGB may not be switched, in the terminating direction, to Switched Access Service Feature Groups B, C and D.

6. Switched Access Service (Cont'd)

6.2 Provision and Description of Switched Access Service Feature Groups (Cont'd)

6.2.2 Feature Group B (FGB) (Cont'd)

(A) Description (Cont'd)

(6) The Telephone Company will establish a trunk group or groups for the customer at end office switches or access tandem switches where FGB switching is provided. When required by technical limitations, a separate trunk group will be established for each type of FGB switching arrangement provided. Different types of FGB or other switching arrangements may be combined in a single trunk group at the option of the Telephone Company.

(7) When all FGB switching arrangements are discontinued at an end office and/or in a LATA, an intercept announcement is provided. This arrangement provides, for a limited period of time, an announcement that the service associated with the number dialed has been disconnected.

6. Switched Access Service (Cont'd)

6.2 Provision and Description of Switched Access Service Feature Groups (Cont'd)

6.2.2 Feature Group B (FGB) (Cont'd)

(B) Optional Features

(1) Common Switching Optional Features

(a) Automatic Number Identification (ANI)
(b) Up to 7 Digit Outpulsing of Access Digits to Customer

(2) Transport Termination Optional Features

(a) Rotary Dial Station Signaling

(3) Local Transport Optional Features

(a) Customer Specification of Local Transport Termination
(b) Supervisory Signaling (as set forth in 6.1.2(A)(2)(a) preceding)
(c) Customer Specified Entry Switch Receive Level

(4) Another feature, Bill Number Screening, which may be available in connection with FGB, is provided under the Telephone Company's local and/or general exchange service tariffs.

(C) Transmission Specifications

FGB is provided with either Type B or Type C Trans mission Specifications. The specifications for the associated parameters are guaranteed to the end office when routed directly or to the first point of switching when routed via an access tandem. Type C Transmission Specifications are provided with Interface Group 1 and Type B is provided with Interface Groups 2 through 10. Type DB Data Transmission Parameters are provided with FGB to the first point of switching.

6. Switched Access Service (Cont'd)

6.2 Provision and Description of Switched Access Service Feature Groups (Cont'd)

6.2.2 Feature Group B (FGB) (Cont'd)

(D) Testing Capabilities

FGB is provided, in the terminating direction where equipment is available, with seven digit access to balance (100 type) test line, milliwatt (102 type) test line, nonsynchronous or synchronous test line, automatic transmission measuring (105 type) test line, data transmission (107 type) test line, loop around test line, short circuit test line and open circuit test line. In addition to the tests described in 6.1.5 preceding which are included with the installation of service and as ongoing routine testing. Additional Cooperative Acceptance Testing, Additional Automatic Testing, and Additional Manual Testing are available as set forth in 13.3.4 following.

6.2.3 Feature Group C (FGC)

(A) Description

(1) FGC is provided at all Telephone Company end office switches on a direct trunk basis or via Telephone Company designated access tandem switches. Feature Group C switching is furnished to providers of MTS and WATS. Additionally, originating Feature Group C switching is available to all customers when used to provide the 500 or 900 NXX Access Service optional feature. Terminating Feature Group C switching is available to all customers who are not MTS and WATS providers only when such terminating access is for purposes of testing Feature Group C facilities provided in conjunction with the 500 or 900 NXX Access Service optional feature.

(2) FGC is provided as trunk side switching through the use of end office or access tandem switch trunk equipment. The switch trunk equipment is provided with answer and disconnect supervisory signaling. Wink start start-pulsing signals are provided in all offices where available. In those offices where wink start start-pulsing signals are not available, delay dial start-pulsing signals will be provided, unless immediate dial pulse signaling is provided, in which case no start-pulsing signals are provided.

6. Switched Access Service (Cont'd)

6.2 Provision and Description of Switched Access Service Feature Groups (Cont'd)

6.2.3 Feature Group C (FGC) (Cont'd)

(A) Description (Cont'd)

(3) FGC is provided with multifrequency address signaling except in certain electromechanical end office switches where multifrequency signaling is not available. In such switches, the address signaling will be dial pulse, revertive pulse, immediate dial pulse or panel call indicator signaling, whichever is available. Up to 12 digits of the called party number dialed by the customer's end user using dual tone multifrequency or dial pulse address signals will be provided by Telephone Company equipment to the customer's premises where the Switched Access Service terminates. Such called party number signals will be subject to the ordinary transmission capabilities of the Local Transport provided.

(4) No access code is required for FGC switching. The telephone number dialed by the customer's end user shall be a seven or ten digit number for calls in the North American Numbering Plan (NANP). For international calls outside the NANP, a seven to twelve digit number may be dialed. The form of the numbers dialed by the customer's end user is NXX-XXXX, 0 or 1 + NXX-XXXX, NPA + NXX-XXXX, 0 or 1 + NPA + NXX-XXXX, and, when the end office is equipped for International Direct Distance Dialing (IDDD), 01 + CC + NN or 011 + CC + NN.

(5) FGC switching, when used in the terminating direction, may be used to access valid NXXs in the LATA, time or weather announcement services of the Telephone Company, community information services of an information provider, and other

6. Switched Access Service (Cont'd)

6.2 Provision and Description of Switched Access Service Feature Groups (Cont'd)

6.2.3 Feature Group C (FGC) (Cont'd)

(A) Description (Cont'd)

(5) (Cont'd)

customers' services (by dialing the appropriate codes) when the services can be reached using valid NXX codes. When directly routed to an end office, only those valid NXX codes served by that office may be accessed. When routed through an access tandem, only those valid NXX codes served by offices subtending the access tandem may be accessed. Where measurement capabilities exist, the customer will also be billed additional non- access charges for calls to certain community information services, for which rates are applicable under Telephone Company exchange service tariffs, e.g., 976 (DIAL-IT) Network Services. Additionally, non-access charges will also be billed for calls from a FGC trunk to another customer's service in accordance with that customer's applicable service rates when the Telephone Company performs the billing function for that customer. Calls in the terminating direction will not be completed to 950-10XX access codes, local operator assistance (0- and 0+), Directory Assistance (411 and 555-1212), service codes 611 and 911 and 101XXXX access codes. Calls will be completed to Directory Assistance (NPA-555-1212 or 555-1212) when FGC switching is combined with Directory Assistance switching. FGC may not be switched, in the terminating direction, to Switched Access Service Feature Groups B, C or D.

6. Switched Access Service (Cont'd)

6.2 Provision and Description of Switched Access Service Feature Groups (Cont'd)

6.2.3 Feature Group C (FGC) (Cont'd)

(A) Description (Cont'd)

(6) The Telephone Company will establish a trunk group or groups for the customer at end office switches or access tandem switches where FGC switching is provided. When required by technical limitations, a separate trunk group will be established for each type of FGC switching arrangement provided. Different types of FGC or other switching arrangements may be combined in a single trunk group at the option of the Telephone Company.

(7) Unless prohibited by technical limitations, the providers of MTS and WATS may, at their option, combine 500, 8XX and 900 Access Service traffic in the same trunk group arrangement with their non-500, non-8XX and non-900 Access Service traffic. When required by technical considerations or when provided to a customer other than the provider of MTS and WATS, or at the request of the customer (i.e., provider of MTS and WATS), a separate trunk group will be established for 500, 8XX and 900 Access Service traffic.

(8) FGC switching is provided with multifrequency address signaling or out of band SS7 signaling where technically feasible. With multifrequency address signaling and SS7 signaling, up to 12 digits of the called party number dialed by the customer's end user using dual tone multifrequency or dial pulse address signals will be provided by Telephone Company equipment to the customer's premises where the Switched Access Service terminates. Such address signals will be subject to the ordinary transmission capabilities of the Local Transport provided.

6. Switched Access Service (Cont'd)

6.2 Provision and Description of Switched Access Service Feature Groups (Cont'd)

6.2.3 Feature Group C (FGC) (Cont'd)

(A) Description (Cont'd)

(9) Operator Transfer Service may be provided with FGC Switched Access Service at Telephone Company designated Operator Services locations.

The Telephone Company will provide Operator Transfer Service for calls originating from telephone numbers associated with exchange service lines in end offices subtending the Operator Services location. Operator Transfer Service is provided as set forth in 6.3.3 following.

6. Switched Access Service (Cont'd)

6.2 Provision and Description of Switched Access Service Feature Groups (Cont'd)

6.2.3 Feature Group C (FGC) (Cont'd)

(B) Optional Features

(1) Common Switching Optional Features

(a) Automatic Number Identification (ANI)
(b) Service Class Routing
(c) Dial Pulse Address Signaling
(d) Revertive Pulse Address Signaling
(e) Delay Dial Start-Pulsing Signaling
(f) Immediate Dial Pulse Address Signaling
(g) Panel Call Indicator Address Signaling
(h) Alternate Traffic Routing
(i) Trunk Access Limitation
(j) End Office End User Line Service Screening for Use with Special Access Service utilized in the provision of WATS or WATS-type Services
(k) Hunt Group Arrangement for Use with Special Access Service utilized in the provision of WATS or WATS-type Services
(l) Uniform Call Distribution Arrangement for Use with Special Access Service utilized in the provision of WATS or WATS-type Services
(m) Nonhunting Number for Use with Hunt Group Arrangement or Uniform Call Distribution Arrangement for Use with Special Access Service utilized in the provision of WATS or WATS-type Services
(n) Band Advance Arrangement for Use with Special Access Service utilized in the provision of WATS or WATS-type Services

(2) Transport Termination Optional Features

(a) Operator Trunks - i.e., Coin, Non-Coin and Combined Coin and Non-Coin. (Non-Coin Trunks are provided at Telephone Company electronic and electromechanical end offices. Coin and Combined Coin and Non-Coin are provided only at Telephone Company electronic end offices and other Telephone Company end offices where equipment is available.)

6. Switched Access Service (Cont'd)

6.2 Provision and Description of Switched Access Service Feature Groups (Cont'd)

6.2.3 Feature Group C (FGC) (Cont'd)

(B) Optional Features (Cont'd)

(3) Local Transport Optional Features

(a) Supervisory Signaling (as set forth in 6.1.2(A)(2)(a) preceding)

(b) Signaling System 7 (SS7)

The SS7 optional feature allows the customer to receive signals for out of band call set up and is available with Feature Group C. This option requires the establishment of a signaling connection between the customer's designated premises/SPOI and a Signaling Transfer Point (STP).

SS7 is provided in both the originating and terminating direction on FGC and each signaling connection is provisioned for two way SS7 signaling information.

The SS7 optional feature is only available where designated in National Exchange Carrier Association, Inc. Tariff F.C.C. No. 4 to providers of MTS and WATS for all traffic and to all other customers for originating calls to 8XX numbers.

(c) Multifrequency Address Signaling

(d) Calling Party Number (CPN)

(e) Charge Number Parameter (CNP)

6. Switched Access Service (Cont'd)

6.2 Provision and Description of Switched Access Service Feature Groups (Cont'd)

6.2.3 Feature Group C (FGC) (Cont'd)

(B) Optional Features (Cont'd)

(4) Chargeable Optional Features

(a) 8XX Data Base Access Service (as set forth in 6.3.3 following).

(b) 500 and 900 NXX Access Service (as set forth in 6.3.3 following).

(c) Common Channel Signaling/Signaling System 7 (CCS/SS7) Network Connection Service (CCSNC)

The CCSNC Optional Feature is provided as set forth in 6.3.3(C) following.

(d) Operator Transfer Service Optional Feature is provided as set forth in 6.3.3 following.

(C) Transmission Specifications

FGC is provided with either Type B or Type C Transmission Specifications as follows:

- When routed directly to the end office either Type B or Type C is provided.
- When routed to an access tandem only Type B is provided.
- Type B or Type C is provided on the transmission path from the access tandem to the end office.

Type C Transmission Specifications are provided with Interface Group 1 when routed directly to an end office. Type B is provided with Interface Groups 2 through 10, whether routed directly to an end office or to an access tandem.

Type DB Data Transmission Parameters are provided with FGC for the transmission path between the customer's premises and the end office when directly routed to the end office, and Type DB Data Transmission Parameters are provided for the transmission path between the customer's premises and the access tandem and between the access tandem and the end office when routed via an access tandem.

6. Switched Access Service (Cont'd)

6.2 Provision and Description of Switched Access Service Feature Groups (Cont'd)

6.2.3 Feature Group C (FGC) (Cont'd)

(D) Testing Capabilities

FGC is provided, in the terminating direction where equipment is available, with seven digit access to balance (100 type) test line, milliwatt (102 type) test line, nonsynchronous or synchronous test line, automatic transmission measuring (105 type) test line, data transmission (107 type) test line, loop around test line, short circuit test line and open circuit test line. In addition to the tests described in 6.1.5 preceding which are included with the installation of service and as ongoing routine testing, Additional Cooperative Acceptance Testing, Additional Automatic Testing, and Additional Manual Testing are available as set forth in 13.3.4 following.

6.2.4 Feature Group D (FGD)

(A) Description

(1) FGD is provided at Telephone Company designated electronic end office switches whether routed directly or via Telephone Company designated electronic access tandem switches.

(2) FGD is provided as trunk side switching through the use of end office or access tandem switch trunk equipment. The switch trunk equipment is provided with wink start start-pulsing signals and answer and disconnect supervisory signaling.

(3) FGD switching is provided with multifrequency address signaling or out of band SS7 signaling. With multi-frequency address signaling and SS7 signaling, up to 12 digits of the called party number dialed by the customer's end user using dual tone multifrequency or dial pulse address signals will be provided by Telephone Company equipment to the customer's premises where the Switched Access Service terminates. Such address signals will be subject to the ordinary transmission capabilities of the Local Transport provided.

6. Switched Access Service (Cont'd)

6.2 Provision and Description of Switched Access Service Feature Groups (Cont'd)

6.2.4 Feature Group D (FGD) (Cont'd)

(A) Description (Cont'd)

(4) FGD switching, when used in the terminating direction, may be used to access valid NXXs in the LATA, time or weather announcement services of the Telephone Company, community information services of an information service provider, and other customers' services (by dialing the appropriate codes) when such services can be reached using valid NXX codes. When directly routed to an end office, only those valid NXX codes served by that office may be accessed. When routed through an access tandem, only those valid NXX codes served by end offices subtending the access tandem may be accessed. The customer will also be billed additional non-access charges for calls to certain community information services, for which rates are applicable under Telephone Company exchange service tariffs, e.g., 976 (DIAL-IT) Network Service. Additionally, non-access charges will also be billed for calls from a FGD trunk to another customer's service in accordance with that customer's applicable service rates when the Telephone Company performs the billing function for that customer. Calls in the terminating direction will not be completed to 950-10XX access codes, local operator assistance (0- and 0+), Directory Assistance (411 and 555-1212), service codes 611 and 911 and 101XXXX access codes. Calls will be completed to Directory Assistance (NPA-555-1212 or 555-1212) when FGD switching is combined with Directory Assistance switching. FGD may not be switched, in the terminating direction, to Switched Access Service Feature Groups B, C or D.

6. Switched Access Service (Cont'd)

6.2 Provision and Description of Switched Access Service Feature Groups (Cont'd)

6.2.4 Feature Group D (FGD) (Cont'd)

(A) Description (Cont'd)

(5) The Telephone Company will establish a trunk group or groups for the customer at end office switches or access tandem switches where FGD switching is provided. When required by technical limitations, a separate trunk group will be established for each type of FGD switching arrangement provided. Different types of FGD or other switching arrangements may be combined in a single trunk group at the option of the Telephone Company.

(6) The access code for FGD switching is a uniform access code of the form 101XXXX. A single access code will be the assigned number of all FGD access provided to the customer by the Telephone Company. No access code is required for calls to a customer over FGD Switched Access Service if the end user's telephone exchange service is arranged for presubscription to that customer, as set forth in 13.3.3 following.

Where no access code is required, the number dialed by the customer's end user shall be a seven or ten digit number for calls in the North American Numbering Plan (NANP). For international calls outside the NANP, a seven to twelve digit number may be dialed. The form of the numbers dialed by the customer's end user is NXX-XXXX, 0 or 1 + NXX-XXXX, NPA + NXX-XXXX, 0 or 1 + NPA + NXX-XXXX, and, when the end office is equipped for International Direct Distance Dialing (IDDD), 01 + CC + NN or 011 + CC + NN.

6. Switched Access Service (Cont'd)

6.2 Provision and Description of Switched Access Service Feature Groups (Cont'd)

6.2.4 Feature Group D (FGD) (Cont'd)

(A) Description (Cont'd)

(6) (Cont'd)

When the 101XXXX access code is used, FGD switching also provides for dialing the digit 0 for access to the customer's operator, 911 for access to the Telephone Company's emergency reporting service, or the end-of-dialing digit (#) for cut-through access to the customer's premises.

(7) FGD switching will be arranged to accept calls from telephone exchange service locations without the need for dialing 101XXXX uniform access code. Each telephone exchange service line may be marked with a code to identify which 101XXXX code its calls will be directed to for interLATA service.

(8) Unless prohibited by technical limitations, the customer's 500, 8XX and 900 Access Service traffic may, at the option of the customer, be combined in the same trunk group arrangement with the customer's non-500, non-8XX and non-900 Access Service traffic. When required by technical limitations, or at the request of the customer, a separate trunk group will be established for 500, 8XX and 900 Access Service traffic.

(9) When a customer has had FGB access in an end office and subsequently replaces the FGB access with FGD access, at the mutual agreement of the customer and the Telephone Company, the Telephone Company will direct calls dialed by the customer's end users using the customer's previous FGB access code to the customer's FGD access service. The customer must be prepared to handle normally dialed FGD calls, as well as calls dialed with the FGB access code which requires the customer to receive additional address signaling from the end user. Such calls will be rated as FGD. The Telephone Company may, with 90 days' written notice to the customer, discontinue this arrangement.

6. Switched Access Service (Cont'd)

6.2 Provision and Description of Switched Access Service Feature Groups (Cont'd)

6.2.4 Feature Group D (FGD) (Cont'd)

(A) Description (Cont'd)

(10) Operator Transfer Service (forwarding of 0- calls) may be provided with FGD Switched Access Service at Telephone Company designated Operator Services locations.

The Telephone Company will provide Operator Transfer Service for calls originating from telephone numbers associated with exchange service lines in end offices subtending the Operator Services location. Operator Transfer Service is provided as set forth in 6.3.3 following.

6. Switched Access Service (Cont'd)

6.2 Provision and Description of Switched Access Service Feature Groups (Cont'd)

6.2.4 Feature Group D (FGD) (Cont'd)

(B) Optional Features

(1) Common Switching Optional Features

(a) Automatic Number Identification (ANI)
(b) Service Class Routing
(c) Alternate Traffic Routing
(d) Call Gapping Arrangement
(e) Trunk Access Limitation
(f) International Carrier Option
(g) End Office End User Line Service Screening for Use with Special Access Service utilized in the provision of WATS or WATS-type Services
(h) Hunt Group Arrangement for Use with Special Access Service utilized in the provision of WATS or WATS-type Services
(i) Uniform Call Distribution Arrangement for Use with Special Access Service utilized in the provision of WATS or WATS-type Services
(j) Nonhunting Number for Use with Hunt Group Arrangement or Uniform Call Distribution Arrangement for use with Special Access Service utilized in the provision of WATS or WATS-type Services
(k) Band Advance Arrangement for Use with Special Access Service utilized in the provision of WATS or WATS-type Services
(l) Digital Switched 56 Service

(2) Transport Termination Optional Features

(a) Operator Trunk, Full Feature Arrangement

6. Switched Access Service (Cont'd)

6.2 Provision and Description of Switched Access Service Feature Groups (Cont'd)

6.2.4 Feature Group D (FGD) (Cont'd)

(B) Optional Features (Cont'd)

(3) Local Transport Optional Features

(a) Supervisory Signaling (as set forth in 6.1.2(A)(2)(a) preceding)

(b) Signaling System 7 (SS7)

The SS7 optional feature allows the customer to send and receive signals for out of band call set up and is available with Feature Group D. This option requires the establishment of a signaling connection between the customer's designated premises/Signaling Point of Interface and a Telephone Company's Signaling Transfer Point (STP).

SS7 is provided in both the originating and terminating direction on FGD and each signaling connection is provisioned for two-way SS7 signaling information.

(c) Multifrequency Address Signaling

(d) Calling Party Number (CPN) Parameter

(e) Charge Number Parameter (CNP)

(f) Carrier Selection Parameter (CSP)

(4) Chargeable Optional Features

(a) 8XX Data Base Access Service (as set forth in 6.3.3 following).

(b) 500 and 900 NXX Access Service (as set forth in 6.3.3 following).

(c) Common Channel Signaling/Signaling System 7 (CCS/SS7) Network Connection Service (CCSNC)

The CCSNC Optional Feature is provided as set forth in 6.3.3(C) following.

6. Switched Access Service (Cont'd)

6.2 Provision and Description of Switched Access Service Feature Groups (Cont'd)

6.2.4 Feature Group D (FGD) (Cont'd)

(B) Optional Features (Cont'd)

(4) Chargeable Optional Features (Cont'd)

(d) CIC and OZZ Signaling Information (COSI)

The COSI optional feature is provided as set forth in 6.3.3(D) following.

(e) Operator Transfer Service

The Operator Transfer Services Optional Feature is provided as set forth in 6.3.3(E) following.

(f) Clear Channel Capability (CCC)

The CCC optional feature is provided as set forth in 6.3.3(F) following.

6. Switched Access Service (Cont'd)

6.2 Provision and Description of Switched Access Service Feature Groups (Cont'd)

6.2.4 Feature Group D (FGD) (Cont'd)

(C) Transmission Specifications

FGD is provided with either Type A, Type B or Type C Transmission Specifications as follows:

- When routed directly to the end office either Type B or C is provided.

- When routed to an access tandem only Type A is provided.

- Type A is provided on the transmission path from the access tandem to the end office.

Type C Transmission Specifications are provided with Interface Group 1. Type A and Type B Transmission Specifications are provided with Interface Groups 2 through 10.

Type DA Data Transmission Parameters are provided for the transmission path between the customer's premises and the access tandem and between the access tandem and the end office when routed via an access tandem. Type DB Data Transmission Parameters are provided with FGD for the transmission path between the customer's premises and the end office when directly routed to the end office.

(D) Testing Capabilities

FGD is provided, in the terminating direction where equipment is available, with seven digit access to balance (100 type) test line, milliwatt (102 type) test line, nonsynchronous or synchronous test line, automatic transmission measuring (105 type) test line, data transmission (107 type) test line, loop around test line, short circuit test line and open circuit test line. In addition to the tests described in 6.1.5 preceding which are included with the installation of service, and as ongoing routine testing, Additional Cooperative Acceptance Testing, Additional Automatic Testing, and Additional Manual Testing, are available as set forth in 13.3.4 following.

When SS7 Signaling is ordered, network compatibility and other testing will be performed cooperatively by the Telephone Company and the customer as specified in Technical References TR-TSV 000905.

6. Switched Access Service (Cont'd)

6.3 Chargeable and Nonchargeable Optional Features

Following are descriptions of the various optional features that are available in lieu of, or in addition to, the standard features provided with the Feature Groups. They are provided as either Common Switching or Transport Termination, 500 and 900 NXX Access Service and 8XX Data Base Access Service options or Operator Transfer Service option.

6.3.1 Common Switching Nonchargeable Optional Features

(A) Call Denial on Line or Hunt Group

This option allows for the screening of terminating FGA calls within the LATA, and for the completion only of calls to 411, 611, 911, 8XX, 555-1212, and a Telephone Company specified set of NXXs within the Telephone Company local exchange calling area of the dial tone office in which the arrangement is provided. All other "toll" calls are routed to a reorder tone or recorded announcement. This feature is provided in all Telephone Company electronic end offices and, where available, in electromechanical end offices. It is available with Feature Group A.

(B) Service Code Denial on Line or Hunt Group

This option allows for the screening of terminating calls within the LATA, and for disallowing completion of calls to 0-, 555 and N11 (e.g., 411, 611, and 911). This feature is provided where available in all Telephone Company electronic end offices and electromechanical end offices. It is available with Feature Group A.

(C) Hunt Group Arrangement

This option provides the ability to sequentially access one of two or more line side connections in the originating direction, when the access code of the line group is dialed. This feature is provided in all Telephone Company end offices. It is available with Feature Group A. All Feature Group A access services in the same hunt group must provide off-hook supervisory signalling from the same point in time in the call sequence i.e., all off-hook supervisory signals must either be provided by the customer's equipment before the called party answers or all must be forwarded by the customer's equipment when the called party answers.

6. Switched Access Service (Cont'd)

6.3 Chargeable and Nonchargeable Optional Features (Cont'd)

6.3.1 Common Switching Nonchargeable Optional Features (Cont'd)

(D) Uniform Call Distribution Arrangement

This option provides a type of multiline hunting arrangement which provides for an even distribution of calls among the available lines in a hunt group. Where available, this feature is provided in Telephone Company electronic end offices only. It is available with Feature Group A.

(E) Nonhunting Number for Use with Hunt Group or Uniform Call Distribution Arrangement

This option provides an arrangement for an individual line within a multiline hunt or uniform call distribution group that provides access to that line within the hunt or uniform call distribution group when it is idle or provides busy tone when it is busy, when the nonhunting number is dialed. Where available, this feature is provided in Telephone Company electronic end offices only. It is available with Feature Group A.

(F) Automatic Number Identification (ANI)

This option provides the automatic transmission of a seven or ten digit number and information digits to the customer designated premises for calls originating in the LATA, to identify the calling station. The ANI feature is an end office software function which is associated on a call-by-call basis with (1) all individual transmission paths in a trunk group routed directly between an end office and a customer designated premises or, where technically feasible, with (2) all individual transmission paths in a trunk group between an end office and an access tandem, and a trunk group between an access tandem and a customer designated premises.

6. Switched Access Service (Cont'd)

6.3 Chargeable and Nonchargeable Optional Features (Cont'd)

6.3.1 Common Switching Nonchargeable Optional Features (Cont'd)

(F) Automatic Number Identification (ANI) (Cont'd)

The seven digit ANI telephone number is available with Feature Groups B and C. With these Feature Groups, technical limitations may exist in Telephone Company switching facilities which require ANI to be provided only on a directly trunked basis. ANI will be transmitted on all calls except those originating from multiparty lines, coin stations and coinless pay telephones using Feature Group B, or when an ANI failure has occurred. Seven digit ANI is not available with SS7 Signaling.

The ten digit ANI telephone number is only available with Feature Group D. The ten digit ANI telephone number consists of the Numbering Plan Area (NPA) plus the seven digit ANI telephone number. The ten digit ANI telephone number will be transmitted on all calls except those identified as multiparty line or ANI failure, in which case only the NPA will be transmitted (in addition to the information digit described below). Ten digit ANI is provided with multifrequency address signaling or SS7 signaling.

With Feature Group C, at the option of the customer, ANI may be ordered from end offices where Telephone Company recording for end user billing is not provided. Additionally, ANI is provided from end offices where message detail recording is not required by the Telephone Company; as with 8XX service. ANI is not provided from end offices where the Telephone Company forwards ANI to its recording equipment.

Where ANI cannot be provided, e.g., on calls from 4 and 8 party services, information digits will be provided to the customer.

The information digits identify: (1) telephone number is the station billing number - no special treatment required, (2) multiparty line - telephone number is a 4- or 8-party line and cannot be identified - number must be obtained via an operator or in some other manner, (3) ANI failure has occurred in the end office switch which prevents identification of calling telephone number -

6. Switched Access Service (Cont'd)

6.3 Chargeable and Nonchargeable Optional Features (Cont'd)

6.3.1 Common Switching Nonchargeable Optional Features (Cont'd)

(F) Automatic Number Identification (ANI) (Cont'd)

must be obtained by operator or in some other manner, (4) hotel/motel originated call which requires room number identification, (5) coinless station, hospital, inmate, etc. call which requires special screening or handling by the customer, and (6) call is an Automatic Identified Outward Dialed (AIOD) call from customer premises equipment. The ANI telephone number is the listed telephone number of the customer and is not the telephone number of the calling party.

These ANI information digits are available with Feature Groups B, C, and D.

Additional ANI information digits are available with Feature Group D only. They include:

1) InterLATA restricted - telephone number is identified line

2) InterLATA restricted - hotel/motel line

3) InterLATA restricted - coinless, hospital, inmate, etc., line

These information digits will be transmitted as agreed to by the customer and the Telephone Company.

6. Switched Access Service (Cont'd)

6.3 Chargeable and Nonchargeable Optional Features (Cont'd)

6.3.1 Common Switching Nonchargeable Optional Features (Cont'd)

(G) Up to 7 Digit Outpulsing of Access Digits to Customer

This option provides for the end office capability of providing up to 7 digits of the uniform access code (950-10XX) to the customer designated premises. The customer can request that only some of the digits in the access code be forwarded. The access code digits would be provided to the customer designated premises using multifrequency signaling, and transmission of the digits would precede the forwarding of ANI if that feature were provided. It is available with Feature Group B.

6. Switched Access Service (Cont'd)

6.3 Chargeable and Nonchargeable Optional Features (Cont'd)

6.3.1 Common Switching Nonchargeable Optional Features (Cont'd)

(I) Delay Dial Start-Pulsing Signaling

This option provides a method of indicating to the near end trunk circuit readiness to accept address signaling information by the far end trunk circuit. Delay dial is often referred to as an off-hook, on-hook signaling sequence. The delay dial signal is the off-hook interval and the start-pulsing signal is the on-hook interval. With integrity check, the calling office will not outpulse until a delay dial (off-hook) signal followed by a start-pulsing (on-hook) signal has been identified at the calling office. This option is available with Feature Group C.

(J) Immediate Dial Pulse Address Signaling

This option provides for the forwarding of dial pulses from the Telephone Company end office to the customer without the need of a start-pulsing signal from the customer. It is available with Feature Group C.

(K) Dial Pulse Address Signaling

This trunk side option provides for the transmission of number information, e.g., called number, between the end office switching system and the customer designated premises (in either direction) by means of direct current pulses. It is available with Feature Group C.

6. Switched Access Service (Cont'd)

6.3 Chargeable and Nonchargeable Optional Features (Cont'd)

6.3.1 Common Switching Nonchargeable Optional Features (Cont'd)

(M) Service Class Routing

This option provides the capability of directing originating traffic from an end office to a trunk group to a customer designated premises, based on the line class of service (e.g., coin, multiparty or hotel/motel), service prefix indicator (e.g., 0-, 0+, 01+ or 011+) or service access code (e.g., 800 or 900). It is provided in suitably equipped end office or access tandem switches and is available with Feature Groups C and D.

(N) Alternate Traffic Routing

When the customer orders both Direct-Trunked Transport and Tandem-Switched Transport at the same end office, this option provides the capability of directing originating traffic from an end office (or appropriately equipped access tandem) to a trunk group (the "high usage" group) to a customer designated premises until that group is fully loaded, and then delivering additional originating traffic (the "overflowing" traffic) from the same end office or access tandem to a different trunk group (the "final" group) to a second customer designated premises. The customer shall specify the last trunk CCS desired for the high usage group. It is provided in suitably equipped end office or access tandem switches and is available with Feature Groups C and D.

(O) Trunk Access Limitation

This option provides for the routing of originating 500 and 900 service calls to a specified number of transmission paths in a trunk group, in order to limit (choke) the completion of such traffic to the customer. Calls to the designated service which could not be completed over the subset of transmission paths in the trunk group, i.e., the choked calls, would be routed to reorder tone. It is provided in all Telephone Company electronic end offices and where available in electromechanical end offices. It is available with Feature Groups C and D.

6. Switched Access Service (Cont'd)

6.3 Chargeable and Nonchargeable Optional Features (Cont'd)

6.3.1 Common Switching Nonchargeable Optional Features (Cont'd)

(P) Call Gapping Arrangement

This option, provided in suitably equipped end office switches, provides for the routing of originating calls to 500 and 900 service to be switched in the end office to all transmission paths in a trunk group at a prescribed rate of flow, e.g., one call every five seconds, in order to limit (choke) the completion of such traffic to the customer. Calls to the designated service which are denied access by this feature, i.e., the choked calls, would be routed to a no-circuit announcement. It is provided in selected Feature Group D equipped end offices and is available only with Feature Group D.

(Q) International Carrier Option

This option allows for Feature Group D end offices or access tandem switches equipped for International Direct Distance Dialing to be arranged to forward the international calls of one or more international carriers to the customer (i.e., the Telephone Company is able to route originating international calls to a customer other than the one designated by the end user either through presubscription or 101XXXX dialing). This arrangement requires provision of written verification to the Telephone Company that the customer is authorized to forward such calls. The written verification must be in the form of a letter of agency authorizing the customer to order the option on behalf of the international carrier. This option is only provided at Telephone Company end offices or access tandems equipped for International Direct Distance Dialing. It is available with Feature Group D.

(R) Band Advance Arrangement for Use with Special Access Service Utilized in the Provision of WATS or WATS-Type Services

This option, which is provided in association with two or more WATS Access Line groups, provides for the automatic overflow of terminating calls to a WATS Access

6. Switched Access Service (Cont'd)

6.3 Chargeable and Nonchargeable Optional Features (Cont'd)

6.3.1 Common Switching Nonchargeable Optional Features (Cont'd)

(R) Band Advance Arrangement for Use with Special Access Service Utilized in the Provision of WATS or WATS-Type Services (Cont'd)

Line group, when that group has exceeded its call capacity. This option is available with Feature Groups A, B, C and D.

(S) End Office End User Line Service Screening for Use with Special Access Service Utilized in the Provision of WATS or WATS-Type Services

This option provides the ability to verify that an end user has dialed a called party address (by screening the called NPA and/or NXX on the basis of geographical bands selected by the Telephone Company) which is in accordance with that end user's service agreement with the customer, e.g., WATS. This option is provided in all Telephone Company electronic end offices which are designated as WATS Serving Offices. It is available with Feature Groups C and D.

(T) Hunt Group Arrangement for Use with Special Access Service Utilized in the Provision of WATS or WATS-Type Services

This option provides the ability to sequentially access one of two or more Special Access Services utilized in the provision of WATS or WATS-type services (e.g., 8XX Service Special access services) in the terminating direction, when the hunting number of the Special Access Service group is forwarded from the customer to the Telephone Company. This feature is provided in all Telephone Company designated WATS Serving Offices. It is available with Feature Groups A, B, C and D.

6. Switched Access Service (Cont'd)

6.3 Chargeable and Nonchargeable Optional Features (Cont'd)

6.3.1 Common Switching Nonchargeable Optional Features (Cont'd)

(U) Uniform Call Distribution Arrangement for Use with Special Access Service Utilized in the Provision of WATS or WATS-Type Services

This option provides a type of multiline hunting arrangement which provides for an even distribution of terminating calls among the available Special Access Services utilized in the provision of WATS or WATS-type Services in the hunt group. Where available, this feature is only provided in Telephone Company designated WATS Serving Offices. It is available with Feature Groups A, B, C and D.

(V) Nonhunting Number for Use with Hunt Group Arrangement or Uniform Call Distribution Arrangement for Use with Special Access Service Utilized in the Provision of WATS or WATS-Type Services

This option provides an arrangement for an individual Special Access Service utilized in the provision of WATS or WATS-type Services within a multiline hunt or uniform call Distribution group that provides access to that Special Access Service within the hunt or uniform call distribution group when it is idle or provides busy tone when it is busy, when the nonhunting number is dialed. Where available, this feature is only provided in Telephone Company designated WATS Serving Offices. It is available with Feature Groups A, B, C and D.

(W) Digital Switched 56 Service

This option provides for a connection between a customer's premise and a suitably equipped end user's premise which uses end office switching and facilities capable of transmitting digital data up to 56 Kilobits per second. Digital Switched 56 Service is only available in appropriately provisioned Feature Group D offices as set forth in National Exchange Carrier Association, Inc. Tariff F.C.C. No. 4.

6. Switched Access Service (Cont'd)

6.3 Chargeable and Nonchargeable Optional Features (Cont'd)

6.3.1 Common Switching Nonchargeable Optional Features (Cont'd)

(X) Multifrequency Address Signaling

Multifrequency Address Signaling is available as an optional feature with FGC and FGD. This feature provides for the transmission of number information and control signals (e.g., number address signals, automatic number identification) between the end office switch and the customer's premises (in either direction). Multifrequency signaling arrangements make use of pairs of frequencies out of a group of six frequencies. Specific information transmitted is dependent upon feature group and call type (i.e., POTS, coin or operator). This feature is not available in combination with SS7 signaling.

(Y) Signaling System 7 (SS7) Signaling

This feature provides common channel out of band transmission of address and supervisory SS7 protocol signaling information between the end office switch or the tandem office switching system and the customer's designated premises. The signaling information is transmitted over facilities provided with the Common Channel Signaling/Signaling System 7 Interconnection Service as specified in 6.1.3(A)(3) preceding. This feature is available with FGC and FGD and will be provided in accordance with the SS7 Interconnect specifications described in Technical Reference TR-TSV-000905.

(Z) Calling Party Number (CPN)

This feature provides for the automatic transmission of the ten digit directory number, associated with a calling station, to the customer's premises for calls originating in the LATA. The ten digit telephone number consists of the NPA plus the seven digit telephone number, which may or may not be the same number as the calling station's charge number. The ten digit telephone number will be coded as presented, or restricted via a "privacy indicator" for delivery to the called end user. This feature is provided with originating FGC and FGD with SS7 signaling. CPN is available where technically feasible.

6. Switched Access Service (Cont'd)

6.3 Chargeable and Nonchargeable Optional Features (Cont'd)

6.3.1 Common Switching Nonchargeable Optional Features (Cont'd)

(AA) Carrier Selection Parameter (CSP)

This feature provides for the automatic transmission of a signaling indicator which signifies to the customer whether or not the call being processed originated from a presubscribed line. If the line was presubscribed, the indicator will signify if the end user did or did not dial 101XXXX. This feature is provided with originating FGD with SS7 signaling.

(AB) Charge Number Parameter (CN)

The CN Parameter is equivalent to the existing ten digit Automatic Number Identification (ANI) available with FGC where technically feasible and FGD with MF signaling. The CN Parameter provides for the automatic transmission of the ten digit billing number of the calling station and the originating line information. This feature is provided with originating FGC and FGD with SS7 signaling.

6.3.2 Transport Termination Nonchargeable Optional Features

(A) Rotary Dial Station Signaling

This option provides for the transmission of called party address signaling from rotary dial stations to the customer designated premises for originating calls. This option is provided in the form of a specific type of Transport Termination. It is available with Feature Group B, only on a directly trunked basis.

6. Switched Access Service (Cont'd)

6.3 Chargeable and Nonchargeable Optional Features (Cont'd)

6.3.2 Transport Termination Nonchargeable Optional Features (Cont'd)

(B) Operator Trunk - Coin, Non-Coin, or Combined Coin and Non-Coin

This option may be ordered to provide coin, non-coin, or combined coin and non-coin operation. It is available only with Feature Group C and is provided in electronic end offices and other Telephone Company end offices where equipment is available. It is provided as a trunk type of Transport Termination.

Coin:
This arrangement provides for initial coin return control and routing of 0+, 0-, 1+ or 011+ prefixed originating coin calls requiring operator assistance to the customer designated premises. Because operator assisted coin calling traffic is routed over a trunk group dedicated to operator assisted calls, this arrangement is only provided in association with the Service Class Routing option.

The operator assistance coin calling arrangement is also normally ordered by the customer in conjunction with the ANI optional feature, since the preponderance of trunk groups equipped with this arrangement will be terminated in the customer's TSPS systems, rather than in the customer's manual cord boards.

Non-Coin:
This arrangement provides for the routing of 0+, 0-, 1+ or 011+ prefixed originating non-coin calls requiring operator assistance to the customer designated premises. Because operator assisted non-coin calling traffic is routed over a trunk group dedicated to operator assisted calls, this arrangement is only provided in association with the Service Class Routing option.

6. Switched Access Service (Cont'd)

6.3 Chargeable and Nonchargeable Optional Features (Cont'd)

6.3.2 Transport Termination Nonchargeable Optional Features (Cont'd)

(B) Operator Trunk - Coin, Non-Coin, or Combined Coin and Non-Coin (Cont'd)

Non-Coin: (Cont'd)
The operator assistance non-coin calling arrangement is also normally ordered by the customer in conjunction with the ANI optional feature, since the preponderance of trunk groups equipped with this arrangement will be terminated in the customer's TSPS systems, rather than in the customer's manual cord boards. When so equipped, the ANI feature provides for the forwarding of information digits which identify that the call has originated from a hotel or motel, and whether room number identification is required, or that special screening is required, e.g., for coinless public stations, dormitory or inmate stations, or other screening arrangements agreed to between the customer and the Telephone Company.

Combined Coin and Non-Coin:
This arrangement provides for initial coin return control and routing of 0+, 0-, 1+, 01+ or 011+ prefixed originating operator assisted coin and non-coin calls requiring operator assistance to the customer designated premises. Because operator assisted coin and non-coin calling traffic is routed over a trunk group dedicated to operator assisted calls, this arrangement is only provided in association with the Service Class Routing option.

6. Switched Access Service (Cont'd)

6.3 Chargeable and Nonchargeable Optional Features (Cont'd)

6.3.2 Transport Termination Nonchargeable Optional Features (Cont'd)

(B) Operator Trunk - Coin, Non-Coin, or Combined Coin and Non-Coin (Cont'd)

Combined Coin and Non-Coin: (Cont'd)
This arrangement is normally ordered by the customer in conjunction with the ANI optional feature, since the preponderance of trunk groups equipped with this arrangement will be terminated in the customer's operator services systems, rather than in the customer's manual cord boards. When so equipped, the ANI optional feature provides for the forwarding of information digits which identify that the call has originated from a hotel or motel, and whether room number identification is required, or that special screening is required, e.g., for coinless public stations, dormitory or inmate stations, or other screening arrangements agreed to between the customer and the Telephone Company.

(C) Operator Trunk - Full Feature

This option provides the initial coin return control function to the customer's operator. It is available with Feature Group D and is provided as a trunk type for Transport Termination. This feature is not available with SS7 Signaling.

6. Switched Access Service (Cont'd)

6.3 Chargeable and Nonchargeable Optional Features (Cont'd)

6.3.3 Chargeable Optional Features

(A) 500 and 900 NXX Access Service

The 500 and 900 NXX Access Service optional feature is an originating offering utilizing trunk side Switched Access Service. The service provides a customer identification function based on the dialed SAC and NXX code.

When an 1+SAC+NXX-XXXX call is originated by an end user, the Telephone Company will perform the customer identification function based on the dialed digits to determine the customer location to which the call is to be routed. If the call originates from an end office switch not equipped to provide the customer identification function, the call will be routed to an office at which the function is available. Once customer identification has been established, the call will be routed to the customer. Calls originating from an end office switch at which the customer identification function is performed, but to which the customer has not ordered 500 or 900 Access Service, will be blocked.

When a customer requests that the Telephone Company open the SAC and any associated NXXs within a specified LATA, the order must include the provisioning of all offices within the LATA.

Calls to a 500 or 900 number dialed via 1+ from coin telephones, 0-, 101XXXX, Inmate Service, and Hotel/Motel Service will be blocked. Calls to a 900 number dialed via 0+ will normally be blocked. Orders received from customers to unblock 0+ calls to a 500 or 900 number will be accommodated where suitably equipped facilities exist.

6. Switched Access Service (Cont'd)

6.3 Chargeable and Nonchargeable Optional Features (Cont'd)

6.3.3 Chargeable Optional Features (Cont'd)

(A) 500 and 900 NXX Access Service (Cont'd)

The manner in which 500 or 900 NXX Access Service is provided is dependent on the status of the end office from which the service is provided (i.e., equipped with equal access capabilities or not equipped with equal access capabilities). When 500 or 900 NXX Access Service is provided from an end office equipped with equal access capabilities, all such service will be provisioned in accordance with the technical characteristics available with Feature Group D (FGD) (i.e., technical specifica-tions, Telephone Company switch and customer premises interfaces, design blocking criteria, address signaling, etc). When 500 or 900 NXX Access Service is provided from an end office not equipped with equal access capabilities, such service will be provisioned in accordance with the technical characteristics available with Feature Group C (FGC).

Unless prohibited by technical limitations, (e.g., different dialing plans), the customer's 500 or 900 NXX Access Service traffic may, at the option of the customer, be combined in the same trunk group arrangement with the customer's non-500 or 900 NXX Access Service traffic. When required by technical limitations, or at the request of the customer, a separate trunk group will be established for 500 or 900 NXX Access Service.

6. Switched Access Service (Cont'd)

6.3 Chargeable and Nonchargeable Optional Features (Cont'd)

6.3.3 Chargeable Optional Features (Cont'd)

(B) 8XX Data Base Access Service

The 8XX Data Base Access Service optional feature is an originating offering utilizing trunk side Switched Access Service. The service provides carrier selection and optional vertical services based on the dialed 8XX number.

When a 1+8XX+NXX-XXXX call is originated by an end user, the Telephone Company will perform the carrier selection function by querying a data base to determine the customer to whose point of termination the call is to be delivered. Unless the customer has ordered optional vertical services, as described in 6.1.2(C)(2) preceding, it is then the responsibility of the customer to perform any further translation the subscriber deems necessary and route the call. Calls to 8XX numbers, for which a data base query returns a carrier identification for a carrier that has not ordered Switched Access Service, will be blocked.

6. Switched Access Service (Cont'd)

6.3 Chargeable and Nonchargeable Optional Features (Cont'd)

6.3.3 Chargeable Optional Features (Cont'd)

(C) Common Channel Signaling/Signaling System 7 Network Connection Service (CCSNC)

Common Channel Signaling/Signaling System 7 (CCS/SS7) Network Connection Service (CCSNC), which is available with Feature Group C and D, where technically feasible as designated in NATIONAL EXCHANGE CARRIER ASSOCIATION, INC TARIFF FCC NO. 4, WIRE CENTER INFORMATION, provides a signaling path between a customer's designated Signaling Point of Interface (SPOI) and a Signaling Transfer Point (STP). This service provides customers with the use of a two-way signaling path for accessing information necessary for the completion of their end user's calls.

CCS/SS7 Network Connection Service is comprised of two rate elements; a Signaling Network Access Link (SNAL) and a Signaling Transfer Point (STP) Port. The SNAL is provided as a dedicated 56 Kbps out-of-band signaling connection between the customer's SPOI and the STP port on the STP.

The CCS/SS7 Network Connection Service is provisioned by a mated pair of STPs as described in Technical Reference TR-TSV 000905 in order to ensure network availability and reliability. The Telephone Company shall not be held liable for service outages if the customer employs technology related to the interconnection of signaling networks that does not adhere to generally accepted industry technical standards.

When CCS/SS7 Network Connection service is provisioned for use with SS7 Signaling, interconnection between signaling networks must occur at an STP.

Rates and charges for the CCS/SS7 Network Connection STP Ports and Signaling Network Access Links are contained in 6.8.1(C) following.

6. Switched Access Service (Cont'd)

6.3 Chargeable and Nonchargeable Optional Features (Cont'd)

6.3.3 Chargeable Optional Features (Cont'd)

(D) CIC and OZZ Signaling Information (COSI)

CIC and OZZ Signaling Information is only available with Feature Group D Direct-Trunked Transport, as set forth in 6.1.2(A)(2) preceding, ordered from an equal access end office switch. It is not available from the Telephone Company access tandem.

CIC and OZZ Signaling Information provides the Carrier Identification Code (CIC) and OZZ digits needed to perform tandem switching functions for switched transport services. This signaling information can be ordered: (1) as multifrequency (MF) address signaling or (2) where technically feasible, as CCS/SS7 signaling. For customers ordering the CCS/SS7 signaling option, out of band signaling interconnection is required at the STP level as offered in this tariff through its Common Channel Signaling Network Connection (CCSNC) service, which is described in 6.3.3(C) preceding.

When the Telephone Company's Customer of Record (COR) selects the CIC and OZZ Signaling Information option for 2-way Direct-Trunked Transport service, the Alternate Tandem Switching Provider (ATSP) that provides the tandem switching function shall record the terminating traffic on behalf of the Telephone Company, as specified in a Letter of Agreement. The originating traffic shall be recorded by the Telephone Company's originating end office.

The Letter of Agreement, which shall be mutually agreed upon by the ATSP and the Telephone Company, shall include: (1) the ATSP's obligations regarding frequency, delivery, timing, and testing of terminating usage tapes (or other automated transmission); (2) audit provisions; (3) dispute/discrepancy resolution; and (4) penalties imposed on the ATSP for untimely usage transmission which results in delayed Telephone Company revenue. The Telephone Company shall work cooperatively with the ATSP to develop a Letter of Agreement. The Telephone Company shall provide 30-day written notice of any changes to the Letter of Agreement.

6. Switched Access Service (Cont'd)

6.3 Chargeable and Nonchargeable Optional Features (Cont'd)

6.3.3 Chargeable Optional Features (Cont'd)

(D) CIC and OZZ Signaling Information (COSI) (Cont'd)

In cases involving the above-mentioned Letter of Agreement, the ATSP is responsible for recording all terminating traffic of 2-way Direct-Trunked Transport service when the CIC and OZZ Signaling Information option is also selected and providing this data on an industry standard terminating usage tape (or other automated transmission) to the Telephone Company. The Telephone Company shall bill the customer of record for the terminating portion of the 2-way service. The data format of this ATSP-provided usage tape (or other automated transmission) must conform to Detail Category 11 Exchange Message Records (Detail Cat. 11 EMR) as described in the Bellcore Practice BR 010-200-010, "CRIS Exchange Message Record."

If the ATSP performing the tandem switching function can not or does not enter into a Letter of Agreement regarding special recording arrangements, the customer shall order 1-way Direct-Trunked Transport service with the CIC and OZZ Signaling Information option for originating traffic and a separate 1-way Direct-Trunked Transport service for terminating traffic. All originating traffic for this 1-way Direct-Trunked Transport service shall be recorded by the Telephone Company's originating end office and billed to the originating end user's presubscribed interexchange carrier (PIC). All terminating traffic for the separate 1-way Direct-Trunked Transport service shall be recorded by the Telephone Company's terminating end office and billed to the customer of record.

Rates and charges for the CIC and OZZ Signaling Information are contained in 6.8.1(D) following.

6. Switched Access Service (Cont'd)

6.3 Chargeable and Nonchargeable Optional Features (Cont'd)

6.3.3 Chargeable Optional Features (Cont'd)

(E) Operator Transfer Service

At the option of the customer, Operator Transfer Service as specified following, is available for use with Feature Group C and Feature Group D Switched Access Service. Operator Transfer Service is ordered as set forth in 5.2 preceding and may be provided to the customer via separate FGC or FGD trunks dedicated to Operator Transfer Service traffic.

Operator Transfer Service is an arrangement in which Telephone Company operators transfer 0 minus (0-) calls (calls for which the end user dials 0 with no additional digits) to the customer designated by the end user.

The operator transfer function will be performed in the following manner:

- The operator answers the 0- call.
- Initially, the Operator will suggest that the end user dial the customer on a direct basis. If the end user insists that the Operator transfer the call, the Operator will ask the end user to identify the desired customer and will then transfer the call as directed.
- If the end user has no preference, or the identified customer has not subscribed to Operator Transfer Service, the end user will be asked to select from a list of available customers.

6. Switched Access Service (Cont'd)

6.3 Chargeable and Nonchargeable Optional Features (Cont'd)

6.3.3 Chargeable Optional Features (Cont'd)

(E) Operator Transfer Service (Cont'd)

The list of available Operator Transfer Service customers will be updated monthly. The order in which customers will be read to end users will be initially determined by the sequence in which customers have ordered the Operator Transfer Service. For each subsequent month, following the initial order for Operator Transfer Service, the customer in the first position on the list will be moved to the last position on the list. All other customers on the list will be moved up one position, e.g. 3rd to 2nd, 2nd to first, etc. New Operator Transfer Service customers will initially be placed at the bottom of the list of customers.

All non-recurring and usage sensitive rates and charges normally applicable to Feature Groups C or D apply to Operator Transfer Service. Additionally, a charge as specified in 6.1.2(C)(4) preceding and 6.8.6 following, is assessed the customer per 0 minus call transferred.

(F) Clear Channel Capability (CCC)

CCC is available only with Feature Group D (FGD) Direct-Trunked Transport and is provided, subject to availability of facilities, as identified in NATIONAL EXCHANGE CARRIER ASSOCIATION, INC. TARIFF F.C.C. NO. 4, WIRE CENTER INFORMATION.

No charge applies when the CCC optional feature is ordered at the same time the Direct-Trunked FGD High Capacity Service is ordered. If the CCC optional feature is ordered as an addition to an existing High Capacity service, a nonrecurring charge is applicable as set forth in 6.8.1(A) following. The customer must agree to out-of-service periods required to add this optional feature to an existing High Capacity Service.

The removal of the CCC optional feature from an existing High Capacity Service will be treated as a discontinuance of the existing service and an installation of new service. All associated nonrecurring installation charges will apply for the new service. A new minimum period will be established for the new service.

6. Switched Access Service (Cont'd)

6.4 Transmission Specifications

Each Switched Access Service transmission path is provided with standard transmission specifications. There are three different standard specifications (Types A, B and C). The standard for a particular transmission path is dependent on the Feature Group, the Interface Group and whether the service is directly routed or via an access tandem. The available transmission specifications are set forth in 15.2.1 following. Data Transmission Parameters are also provided with each Switched Access Service transmission path. The Telephone Company will, upon notification by the customer that the data parameters set forth in 15.2.2(A), 15.2.2(B) or 15.2.2(C) are not being met, conduct tests independently or in cooperation with the customer, and take any necessary action to insure that the data parameters are met.

The Telephone Company will maintain existing transmission specifications on functioning service configurations installed prior to the effective date of this tariff except that service configurations having performance specifications exceeding the standards listed in this provision will be maintained at performance levels specified in this tariff.

The transmission specifications concerning Switched Access Service are immediate action limits and are set forth in 15.2 following. Acceptance limits are set forth in Technical Reference TR-NPL-000334. This Technical Reference also provides the basis for determining Switched Access Service maintenance limits.

6. Switched Access Service (Cont'd)

6.5 Obligations of the Telephone Company

In addition to the obligations of the Telephone Company set forth in 2. preceding, the Telephone Company has certain other obligations pertaining only to the provision of Switched Access Service. These obligations are as follows:

6.5.1 Network Management

The Telephone Company will administer its network to insure the provision of acceptable service levels to all telecommunications users of the Telephone Company's network services. Generally, service levels are considered acceptable only when both end users and customers are able to establish connections with little or no delay encountered within the Telephone Company network. The Telephone Company maintains the right to apply protective controls, i.e., those actions, such as call gapping, which selectively cancel the completion of traffic, over any traffic carried over its network, including that associated with a customer's Switched Access Service. Generally, such protective measures would only be taken as a result of occurrences such as failure or overload of Telephone Company or customer facilities, natural disasters, mass calling or national security demands. In the event that the protective controls applied by the Telephone Company result in the complete loss of service by the customer, the customer will be granted a Credit Allowance for Service Interruption as set forth in 2.4.4(B)(3) preceding.

6. Switched Access Service (Cont'd)

6.5 Obligations of the Telephone Company (Cont'd)

6.5.2 Design and Traffic Routing of Switched Access Service

(A) Feature Groups A and B

For Feature Groups A and B, the line or trunk directionality and traffic routing of the Switched Access Service between the customer's premises and the entry switch are determined by the customer's order for service. Additionally, for Feature Group B the customer may order the optional feature Customer Specification of Local Transport Termination.

6. Switched Access Service (Cont'd)

6.5 Obligations of the Telephone Company (Cont'd)

6.5.2 Design and Traffic Routing of Switched Access Service (Cont'd)

(B) Feature Group C

For Feature Group C, the Telephone Company shall design and determine the routing of Switched Access Service. Additionally, for Tandem-Switched Transport the Telephone Company will design and determine the routing from the first point of switching to the end office. The Telephone Company shall also decide if capacity is to be provided by originating only, terminating only, or two-way trunk groups. Finally, the Telephone Company will decide whether trunk side access will be provided through the use of two-wire or four-wire trunk terminating equipment.

Selection of facilities and equipment and traffic routing of the service are based on standard engineering methods, available facilities and equipment, and actual traffic patterns.

(C) Feature Group D

For Feature Group D, the Telephone Company shall design and determine the routing of Tandem-Switched Transport service, including the selection of the first point of switching and the selection of facilities from the interface to any switching point and to the end offices where busy hour minutes of capacity are ordered. The Telephone Company shall also decide if capacity is to be provided by originating only, terminating only, or two-way trunk groups. Finally, the Telephone Company will decide whether trunk side access will be provided through the use of two-wire or four-wire trunk terminating equipment.

6. Switched Access Service (Cont'd)

6.5 Obligations of the Telephone Company (Cont'd)

6.5.2 Design and Traffic Routing of Switched Access Service (Cont'd)

(C) Feature Group D (Cont'd)

For Feature Group D Direct-Trunked Transport service, the Telephone Company will determine the routing of switched access service from the point of interface to the first point of switching or, if the customer specifies one or more hub locations for multiplexing, from the point of interface to the hub location, from one hub location to another hub location, and/or from a hub location to the first point of switching.

Selection of facilities and equipment and traffic routing of the service are based on standard engineering methods, available facilities and equipment, and actual traffic patterns.

6. Switched Access Service (Cont'd)

6.5 Obligations of the Telephone Company (Cont'd)

6.5.3 Provision of Service Performance Data

Subject to availability, end-to-end service performance data available to the Telephone Company through its own service evaluation routines, may also be made available to the customer based on previously arranged intervals and format. These data provide information on overall end-to-end call completion and non-completion performance, e.g., customer equipment blockage, failure results and transmission performance. These data do not include service performance data which are provided under other tariff sections, e.g., testing service results. If data are to be provided in other than paper format, the charges for such exchange will be determined on an individual case basis.

6.5.4 Trunk Group Measurement Reports

Subject to availability, the Telephone Company will make available trunk group data in the form of usage in CCS, peg count and overflow, to the customer based on previously agreed to intervals.

6. Switched Access Service (Cont'd)

6.5 Obligations of the Telephone Company (Cont'd)

6.5.5 Determination of Number of Transmission Paths

For Feature Groups A and B, which are ordered on a per line or per trunk basis respectively, and Feature Groups C and D when ordered on a per trunk basis, the customer specifies the type of transport facilities and the number of channels in the order for service. For Tandem-Switched Transport, the Telephone Company will determine the number of Switched Access Service transmission paths to be provided for the Switched Access Feature Group C or D busy hour minutes of capacity ordered. A transmission path is a communication path within the frequency bandwidth of approximately 300 to 3000 Hz or a derived communication path of a frequency bandwidth of approximately 300 Hz to 3000 Hz provided over a high frequency analog facility or a high speed digital facility between a customer's premises and a Telephone Company location. The number of transmission paths will be developed using the total busy hour minutes of capacity by type (as described in 6.1.1(E) preceding) for the end offices for each Feature Group ordered from a customer's designated premises. The total busy hour minutes of capacity by type for the end office will be converted to transmission paths using standard Telephone Company traffic engineering methods. The number of transmission paths provided shall be the number required based on (1) the use of access tandem switches and end office switches, (2) the use of end office switches only, or (3) the use of tandem switches only.

6.5.6 Determination of Number of End Office Transport Terminations

For analog entry switches, a termination will be provided for each transmission path provided. For digital entry switches, an equivalent termination will be provided for each transmission path provided.

6. Switched Access Service (Cont'd)

6.5 Obligations of the Telephone Company (Cont'd)

6.5.7 Design Blocking Probability

The Telephone Company will design the facilities used in the provision of Switched Access Service to meet the blocking probability criteria as set forth in (A) through (D) following.

(A) For Feature Groups A and B no design blocking criteria apply.

(B) For Feature Group C, the design blocking objective will be no greater than one percent (.01) between the point of termination at the customer's designated premises and the first point of switching when traffic is directly routed without an alternate route. Standard traffic engineering methods will be used by the Telephone Company to determine the number of transmission paths required to achieve this level of blocking.

(C) For Feature Group D, the design blocking objective will be no greater than one percent (.01) between the point of termination at the customer's designated premises and the end office switch, whether the traffic is directly routed without an alternate route or routed via an access tandem. Standard traffic engineering methods as set forth in reference document Telecommunications Transmission Engineering - Volume 3 - Networks and Services (Chapters 6-7) will be used by the Telephone Company to determine the number of transmission paths required to achieve this level of blocking.

(D) The Telephone Company will perform routine measurement functions except on Feature Groups A and B, to assure that an adequate number of transmission paths are in service. The Telephone Company will recommend that additional capacity (i.e., busy hour minutes of capacity or trunks) be ordered by the customer when additional paths are required to reduce the measured blocking to the designed blocking level. For the capacity ordered, the design blocking objective is assumed to have been met if the routine measurements show that the measured blocking does not exceed the threshold listed in the following tables.

6. Switched Access Service (Cont'd)

6.5 Obligations of the Telephone Company (Cont'd)

6.5.7 Design Blocking Probability (Cont'd)

(D) (Cont'd)

(1) For transmission paths carrying only first routed traffic direct between an end office and customer's designated premises without an alternate route, and for paths carrying only overflow traffic, the measured blocking thresholds are as follows:

Number of Transmission Paths Per Trunk Group	Measured Blocking Thresholds in the Time Consistent Busy Hour for the Number of Measurements Taken Between 8:00 a.m. and 11:00 p.m. Per Trunk Group			
	15-20 Measurements	11-14 Measurements	7-10 Measurements	3-6 Measurements
2	.070	.080	.090	.140
3	.050	.060	.070	.090
4	.050	.060	.070	.080
5-6	.040	.050	.060	.070
7 or more	.030	.035	.040	.060

(2) For transmission paths carrying first routed traffic between an end office and customer's premises via an access tandem, the measured blocking thresholds are as follows:

Number of Transmission Paths Per Trunk Group	Measured Blocking Thresholds in the Time Consistent Busy Hour for the Number of Measurements Taken Between 8:00 a.m. and 11:00 p.m. Per Trunk Group			
	15-20 Measurements	11-14 Measurements	7-10 Measurements	3-6 Measurements
2	.045	.055	.060	.095
3	.035	.040	.045	.060
4	.035	.040	.045	.055
5-6	.025	.035	.040	.045
7 or more	.020	.025	.030	.040

6. Switched Access Service (Cont'd)

6.6 Obligations of the Customer

In addition to the obligations of the customer set forth in 2. preceding, the customer has certain specific obligations pertaining to the use of Switched Access Service. These obligations are as follows:

6.6.1 Report Requirements

Customers are responsible for providing the following reports to the Telephone Company, when applicable.

(A) Jurisdictional Reports

When a customer orders Switched Access Service for both interstate and intrastate use, the customer is responsible for providing reports as set forth in 2.3.10 preceding. Charges will be apportioned in accordance with those reports. The method to be used for determining the charges is set forth in 2.3.11 preceding.

(B) Code Screening Reports

When a customer orders service class routing, trunk access limitation or call gapping arrangements, it must report the number of trunks and/or the appropriate codes to be instituted in each end office or access tandem switch, for each of the arrangements ordered.

6.6.2 Supervisory Signaling

The customer's facilities shall provide the necessary on-hook, off-hook, answer and disconnect supervision.

6.6.3 Trunk Group Measurement Reports

With the agreement of the customer, trunk group data in the form of usage in CCS, peg count and overflow for its end of all access trunk groups, where technologically feasible, will be made available to the Telephone Company. These data will be used to monitor trunk group utilization and service performance and will be based on previously arranged intervals and format.

6. Switched Access Service (Cont'd)

6.7 Rate Regulations

This section contains the specific regulations governing the rates and charges that apply for Switched Access Service.

6.7.1 Description and Application of Rates and Charges

There are three types of rates and charges that apply to Switched Access Service. These are monthly recurring rates, usage rates and nonrecurring charges. These rates and charges are applied differently to the various rate elements as set forth in (D) following.

(A) Monthly Rates

Monthly rates are recurring, and apply each month or fraction thereof that a specific rate element is provided. For billing purposes, each month is considered to have 30 days.

(B) Usage Rates

Usage rates are rates that apply only when a specific rate element is used. These are applied on a per access minute basis. Access minute charges are accumulated over a monthly period.

(C) Nonrecurring Charges

Nonrecurring charges are one-time charges that apply for a specific work activity (i.e., installation or change to an existing service). The types of nonrecurring charges that apply for Switched Access Service are: installation of service, 500 and 900 NXX translation optional feature, and service rearrangements.

(1) Installation of Service

Nonrecurring charges apply to each Switched Access Service installed. For FGA and FGB, which are ordered on a per line or trunk basis respectively, the charge is applied per line or trunk. For FGC and FGD, when ordered on a per trunk basis, the charge is applied on a per trunk basis. For FGC and FGD, when ordered on a busy hour minutes of capacity basis, the charge is also applied on a per trunk basis but the charge applies only when the capacity ordered requires the installation of an additional trunk(s).

6. Switched Access Service (Cont'd)

6.7 Rate Regulations (Cont'd)

6.7.1 Description and Application of Rates and Charges (Cont'd)

(C) Nonrecurring Charges (Cont'd)

(2) 500 and 900 NXX Translation Optional Feature

This nonrecurring charge applies to the initial order for the installation of the 500 or 900 Translation optional feature with Feature Group C or Feature Group D Switched Access Service and for each subsequent order received to add or change NXX translation codes. This charge, if applicable, applies whether this optional feature is installed coincident with or at any time subsequent to the installation of Switched Access Services. This charge is applied by the Telephone Company on a per SAC order basis as specified in 6.1.2(C)(1)(a) preceding, regardless of the number of NXX codes specified on the order.

6. Switched Access Service (Cont'd)

6.7 Rate Regulations (Cont'd)

6.7.1 Description and Application of Rates and Charges (Cont'd)

(C) Nonrecurring Charges (Cont'd)

(3) Service Rearrangements

All changes to existing services other than changes involving administrative activities and the off-hook supervisory signalling of FGA Access Services, will be treated as a discontinuance of the existing service and an installation of a new service. The nonrecurring charge described in (1) preceding will apply for this work activity. Moves that change the physical location of the point of termination are described and charged for as set forth in 6.7.6 following.

If, due to technical limitations of the Telephone Company, a customer could not combine its 500, 8XX or 900 Access Service traffic with its other trunk side Switched Access Services, no charge shall apply to combine these trunk groups when it becomes technically possible.

Administrative changes will be made without charge(s) to the customer. Administrative changes are as follows:

- Change of customer name,
- Change of customer or customer's end user premises address when the change of address is not a result of a physical relocation of equipment,
- Change in billing date (name, address, or contact name or telephone number),
- Change of agency authorization,
- Change of customer circuit identification,
- Change of billing account number,
- Change of customer test line number,
- Change of customer or customer's end user contact name or telephone number, and
- Change of jurisdiction.

6. Switched Access Service (Cont'd)

6.7 Rate Regulations (Cont'd)

6.7.1 Description and Application of Rates and Charges (Cont'd)

(C) Nonrecurring Charges (Cont'd)

(3) Service Rearrangements (Cont'd)

Changes to the point in time when the off-hook supervisory signal is provided in the originating call sequence i.e., when the off-hook supervisory signal is changed from being provided by the customer's equipment before the called party answers to being forwarded by the customer's equipment when the called party answers or vice versa, are subject to the nonrecurring charge as set forth in 5.2.2(A) preceding.

For additions, changes or modifications to an optional feature which has a separate nonrecurring charge, that nonrecurring charge will apply.

For additions of or modifications to optional features that do not have their own separate nonrecurring charges, the nonrecurring charge as set forth in (1) preceding will apply. When an optional feature is not required on each transmission path, but rather for an entire transmission path group, an end office or an access tandem switch, only one such charge will apply (i.e., it will not apply per transmission path).

For conversion of FGC and FGD trunks from multifrequency address signaling to SS7 signaling or from SS7 signaling to multifrequency address signaling, nonrecurring charges will apply as set forth in 6.8.1(C)(3).

6. Switched Access Service (Cont'd)

6.7 Rate Regulations (Cont'd)

6.7.1 Description and Application of Rates and Charges (Cont'd)

(D) Application of Rates

The application of rates is dependent upon the Feature Group, type of Entrance Facility, type of transport (e.g., Direct-Trunked Transport, Tandem-Switched Transport), type of Multiplexing, and the availability of equal access capabilities in the end office to which the service is provided.

Rates are applied either as premium rates or transitional rates. Transitional rates are discounted access minute rates for measured or assumed access minutes that originate from or terminate at end offices not equipped with equal access capabilities. Premium rates always apply to the following Local Transport rate elements:

- Entrance Facility
- Direct-Trunked Transport Facility
- Direct-Trunked Transport Termination
- Multiplexing
- Tandem-Switched Transport Facility
- Tandem-Switched Transport Termination
- Tandem Switching Charge

The following rules provide the basis for applying the rates and charges:

(1) Premium rates apply to all FGC access minutes when the service is provided to customers which furnish intrastate MTS/WATS, and to all access minutes that originate or terminate at end offices equipped with equal access (i.e., FGD) capabilities. In addition, premium rates apply to FGB access minutes when utilized in the provision of MTS/WATS service.

6. Switched Access Service (Cont'd)

6.7 Rate Regulations (Cont'd)

6.7.1 Description and Application of Rates and Charges (Cont'd)

(D) Application of Rates (Cont'd)

(2) Transitional rates (i.e., discounted access minute rates) apply to all FGA and FGB access minutes (measured or assumed) originating or terminating in an end office which is not equipped with equal access capabilities. In addition, transitional rates apply to FGC access minutes originating in an end office which is not equipped with equal access capabilities when the FGC service is used in conjunction with 500, 8XX or 900 Access Service, by customers who do not furnish intrastate MTS/WATS.

6. Switched Access Service (Cont'd)

6.7 Rate Regulations (Cont'd)

6.7.1 Description and Application of Rates and Charges (Cont'd)

(D) Application of Rates (Cont'd)

(3) When FGA or FGB Switched Access Service except as set forth in (1) preceding provided to an entry switch (i.e., dial tone office for FGA and access tandem for FGB) has usage originating from and/or terminating at both end offices that have been converted to equal access and end offices that have not been converted, the premium and non-premium transitional rates will apply in the following manner:

6. Switched Access Service (Cont'd)

6.7 Rate Regulations (Cont'd)

6.7.1 Description and Application of Rates and Charges (Cont'd)

(D) Application of Rates (Cont'd)

(3) (Cont'd)

(a) All access minutes that originate from or terminate at the equal access end office(s) will be billed at premium rates. Access minutes that originate from or terminate at end offices not equipped with equal access capabilities, hereinafter referred to as non-premium access minutes, will continue to be billed at non-premium transitional rates. Non-premium transitional rates will apply as follows depending on the type of service.

(i) For FGA and FGB services, the number of non-premium access minutes to be billed at transitional rates is derived by subtracting the number of premium rated access minutes from the total number of access minutes.

(ii) Premium access minutes will be determined as set forth in (b) following.

(b) The number of access minutes to be rated as premium access minutes is determined as follows:

(i) Where end office specific usage data is available, premium rates apply to the measured access minutes originating from or terminating at the equal access end office(s).

(ii) Where end office specific usage data is not available for originating and/or terminating FGA, the total originating and/or terminating usage will be measured or assumed usage at the entry switch as set forth in 6.7.7 following. FGA originating and/or terminating usage will

6. Switched Access Service (Cont'd)

6.7 Rate Regulations (Cont'd)

6.7.1 Description and Application of Rates and Charges (Cont'd)

(D) Application of Rates (Cont'd)

(3) (Cont'd)

(b) (Cont'd)

(ii) then be apportioned between premium and non-premium access minutes in the following manner. For originating usage, develop the ratio of the number of subscriber lines in the local calling area of the entry switch that are served by equal access end offices to the total number of subscriber lines in that local calling area. For terminating usage, develop the ratio of the number of subscriber lines in the valid calling area of the entry switch that are served by the equal access end offices to the total number of subscriber lines in that valid calling area. Then apply these ratios to the total number of subscriber lines in that valid calling area. Then apply these ratios to the total number of originating and/or terminating FGA access minutes respectively to determine the usage to be billed at premium rates, unless adjusted as set forth in (iv) following. The local calling area of the entry switch is as defined in the Telephone Company's local and/or general exchange service tariff. The valid calling area of the entry switch is as defined in the Telephone Company's interstate access service tariff. For purposes of administering this regulation, subscriber lines are defined as exchange service lines, Centrex lines and Centrex-type lines provided by the Telephone Company under its local and/or general exchange service tariff.

6. Switched Access Service (Cont'd)

6.7 Rate Regulations (Cont'd)

6.7.1 Description and Application of Rates and Charges (Cont'd)

(D) Application of Rates (Cont'd)

(3) (Cont'd)

(b) (Cont'd)

(iii) Where end office specific usage data is not available for originating and/or terminating FGB, the total originating and/or terminating usage will be measured or assumed usage at the entry switch (i.e. access tandem) as set forth in 6.7.7 following. FGB originating and/or terminating usage will then be apportioned between premium and non-premium access minutes in the following manner. First, develop the ratio of the number of subscriber lines provided to end offices subtending the access tandem that are serviced by equal access end offices to the total number of subscriber lines in all end offices subtending the access tandem. Then apply this ratio to the total number of originating and/or terminating FGB access minutes to determine the usage to be billed at premium rates, unless adjusted as set forth in (iv) following. For purposes of administering this regulation, subscriber lines are defined as exchange service lines, Centrex lines and Centrex-type lines provided by the Telephone Company under its local and/or general exchange service tariff.

The ratio used to calculate the premium usage as set forth in (ii) and (iii) preceding will be determined on a quarterly basis and provided to the customer with the last bill rendered for the preceding

6. Switched Access Service (Cont'd)

6.7 Rate Regulations (Cont'd)

6.7.1 Description and Application of Rates and Charges (Cont'd)

(D) Application of Rates (Cont'd)

(3) (Cont'd)

(b) (Cont'd)

(iii) (Cont'd)

quarter or mailed separately within five working days after the first day of the new quarter. A quarter is defined for these purposes as beginning on the first day of January, April, July or October.

(iv) Where FGD Switched Access Service is provided to a customer in an end office(s) where that customer's premium access minutes have been determined in accordance with (ii) and (iii) preceding, such premium access minutes will be adjusted in the following manner. For each FGD access minute originating and/or terminating from that end office, the premium access minutes as set forth in (ii) and (iii) preceding will be reduced on a one for one basis, but in no event shall the reduction exceed the total number of premium access minutes as set forth in (ii) and (iii) from that end office. The customer will be billed for the revised number of premium access minutes.

(c) Where originating and/or terminating measurement capability does not exist for Feature Group A or Feature Group B Switched Access Services provided to an entry switch, the number of access minutes that will be assumed are as set forth in Section 6.7.7 following.

6. Switched Access Service (Cont'd)

6.7 Rate Regulations (Cont'd)

6.7.1 Description and Application of Rates and Charges (Cont'd)

(D) Application of Rates (Cont'd)

(3) (Cont'd)

(c) (Cont'd)

The Telephone Company will provide written notification to all access customers of record within a particular LATA that an end office in that LATA is scheduled to be converted to an equal access end office. This notification will be sent, via certified U.S. Mail, to each customer of record in the LATA where the conversion is scheduled to occur, at least six months in advance of the conversion date.

The customer will have the choice of converting existing services to equal access (i.e., Feature Group D) or retaining the existing services. The conversion of existing services will be at no charge provided the order to convert such services to Feature Group D is received as set forth in 6.7.5 following. Premium rates will apply to the total access minutes beginning on the actual conversion date, whether the customer chooses to convert to FGD or retain existing services.

6. Switched Access Service (Cont'd)

6.7 Rate Regulations (Cont'd)

6.7.1 Description and Application of Rates and Charges (Cont'd)

(D) Application of Rates (Cont'd)

(4) Common Channel Signaling/Signaling System 7 (CCS/SS7) Network Connection

The CCS/SS7 Network Connection is comprised of a Signaling Mileage Facility charge, a Signaling Mileage Termination charge, a Signaling Entrance Facility charge, and a Signaling Transfer Point (STP) Port charge.

The Signaling Mileage Facility charge is assessed on a per facility per mile basis. The Signaling Mileage Termination charge is assessed on a per termination basis (i.e., at each end of the Signaling Mileage Facility). When the Signaling Mileage Facility mileage measurement is zero, Signaling Mileage Termination charges do not apply.

The Signaling Entrance Facility charge is assessed on a per facility basis for the connection between the customer's designated premises (Signaling Point of Interface) and the serving wire center of that premises. This charge will apply even if the customer designated premises and the serving wire center are co-located in a Telephone Company building.

The STP Port charge is assessed on a per port basis for each termination of a Signaling Network Access Link at an STP.

(5) CIC and OZZ Signaling Information (COSI)

The rates applicable to CIC and OZZ Signaling Information are nonrecurring charges based on the signaling method selected (MF and CCS/SS7). The rates are applied only to the customer of record's initial order for COSI.

6. Switched Access Service (Cont'd)

6.7 Rate Regulations (Cont'd)

6.7.2 Minimum Periods

Switched Access Service is provided for a minimum period of one month.

ACCESS SERVICE

6. Switched Access Service (Cont'd)

6.7 Rate Regulations (Cont'd)

6.7.3

(Reserved for Future Use)

6. Switched Access Service (Cont'd)

6.7 Rate Regulations (Cont'd)

6.7.4

(Reserved for Future Use)

6. Switched Access Service (Cont'd)

6.7 Rate Regulations (Cont'd)

6.7.4 Minimum Monthly Usage Charge (MMUC) (ad)

The MMUC billed to the customer for Feature Group C and Feature Group D when ordered in BHMCs will be based on the total number of BHMCs (by type of BHMC) provided in or out of the end office (by Feature Group). For Feature Group D ordered on a per trunk basis, the MMUC will be billed to the customer based on an assumed 30 BHMCs per trunk. For Feature Group A, the MMUC will be billed to the customer at the line or hunt group level or other level of account based on an assumed 30 BHMCs per line. For Feature Group B, the MMUC will be billed to the customer based on an assumed 30 BHMCs per trunk, by entry switch.

The MMUC is not applied to Feature Group A and Feature Group B services when an assumed average number of access minutes are used because actual measurement capabilities do not exist. In these cases, the customer will always be billed for the assumed average number of access minutes.

6. Switched Access Service (Cont'd)

6.7 Rate Regulations (Cont'd)

6.7.5 Change of Feature Group Type

Changes from one type of Feature group to another will be treated as a discontinuance of one type of service and a start of another. Nonrecurring charges will apply, with one exception. When a customer upgrades a Feature Group A or B service to a Feature Group D service and when Feature Group C is upgraded to Feature Group D coincident with the availability of Feature Group D in an end office, the nonrecurring charges will not apply and minimum period obligations will not change, i.e., the time elapsed in the existing minimum period obligations will be credited to the minimum period obligations for Feature Group D service, subject to the following limitations. In order to avoid the imposition of nonrecurring charges a customer which is a participant in the presubscription allocation process (i.e., is on the presubscription ballot) must (1) submit its order to disconnect Feature Group A and/or B within 30 days after the date the results of the final allocation of customers in an end office are actually received by the customer, and (2) make the effective date for disconnection of the Feature Group A and/or B Access Services no later than 60 days after the final allocation results are received by the customer. A customer which is not a participant in the allocation process (i.e., is not on the presubscription ballot) is subject to the same rules preceding. The time frames for the nonparticipating customer(s) are the same as those which apply to the last customer to receive the results of the final allocation of customers in an end office who is a participant in the allocation process. For all other changes from one type of Feature Group to another, new minimum period obligations will be established.

6.7.6 Moves

A move involves a change in the physical location of one of the following:

- The point of termination at the customer's premises
- The customer's premises

6. Switched Access Service (Cont'd)

6.7 Rate Regulations (Cont'd)

6.7.6 Moves (Cont'd)

The charges for the move are dependent on whether the move is to a new location within the same building or to a different building.

(A) Moves Within the Same Building

When the move is to a new location within the same building, the charge for the move will be an amount equal to one half of the nonrecurring charge for the capacity affected. There will be no change in the minimum period requirements.

(B) Moves to a Different Building

Moves to a different building will be treated as a discontinuance and start of service and all associated nonrecurring charges will apply. New minimum period requirements will be established for the new service. The customer will also remain responsible for satisfying all outstanding minimum period charges for the discontinued service.

6.7.7 Measuring Access Minutes

Customer traffic to end offices will be measured (i.e., recorded or assumed) by the Telephone Company at end office switches or access tandem switches. Originating and terminating calls will be measured (i.e., recorded or assumed) by the Telephone Company to determine the basis for computing chargeable access minutes. If customer message detail is not available because the Telephone Company lost or damaged tapes or incurred recording system outages, the Telephone Company will estimate the volume of lost customer messages and associated revenue based on previously known values.

6. Switched Access Service (Cont'd)

6.7 Rate Regulations (Cont'd)

6.7.7 Measuring Access Minutes (Cont'd)

For terminating calls over FGA and FGB, FGC to 8XX and FGD and for originating calls over FGA (when the off-hook supervisory signal is provided by the customer's equipment before the called party answers), and FGB and FGD, the measured minutes are the chargeable access minutes. For originating calls over FGA (when the off-hook supervisory signal is forwarded by the customer's equipment when the called party answers), and FGC, chargeable originating access minutes are derived from recorded minutes in the following manner:

6. Switched Access Service (Cont'd)

6.7 Rate Regulations (Cont'd)

6.7.7 Measuring Access Minutes (Cont'd)

Step 1: Obtain recorded originating minutes and messages, measured as set forth in (C) following for FGA, when the off-hook supervisory signal is forwarded by the customer's equipment when the called party answers and for FGC as set forth in (E) following from the appropriate recording data.

Step 2: Obtain the total attempts by dividing the originating measured messages by the completion ratio. Completion ratios (CR) are obtained separately for the major call categories such as DDD, operator, 500, 700, 8XX, 900 and international from a sample study which analyzes the ultimate completion status of the total attempts which receive acknowledgement from the customer. That is, Measured Messages divided by Completion Ratio equals Total Attempts.

Step 3: Obtain the total non-conversation time additive (NCTA) by multiplying the total attempts (obtained in Step 2) by the NCTA per attempt ratio. The NCTA per attempt ratio is obtained from the sample study identified in Step 2 by measuring the non-conversation time associated with both completed and incompleted attempts. The total NCTA is the time on a completed attempt from customer acknowledgement of receipt of call to called party answer (set up and ringing) plus the time on an incompleted attempt from customer acknowledgment of call until the access tandem or end office receives a disconnect signal (ring - no answer, busy or network blockage). That is, Total Attempts times Non- Conversation Time per Attempt Ratio equals Total NCTA.

Step 4: Obtain total chargeable originating access minutes by adding the total NCTA (obtained in Step 3) to the recorded originating measured minutes (obtained in Step 1). That is, Measured Minutes plus NCTA equals Chargeable Originating Access Minutes.

6. Switched Access Service (Cont'd)

6.7 Rate Regulations (Cont'd)

6.7.7 Measuring Access Minutes (Cont'd)

Following is an example which illustrates how the chargeable originating access minutes are derived from the measured originating minutes using this formula.

Where: Measured Minutes (M. Min.) = 7,000
Measured Messages (M. Mes.) = 1,000
Completion Ratio (CR) = 75
NCTA per Attempt = .4

(1) Total Attempts = $\frac{1,000 (M. Mes)}{.75 (CR)}$ = 1,333.33

(2) Total NCTA = .4 (NCTA per Attempt) x 1,333.33 = 533.33

(3) Total Chargeable Originating Access Minutes = 7,000 (M. Min) + 533.33 (NCTA) = 7,533.33

When assumed minutes are used, the assumed minutes are the chargeable access minutes.

FGA access minutes or fractions thereof, the exact value of the fraction being a function of the switch technology where the measurement is made, are accumulated over the billing period for each line or hunt group, and are then rounded up to the nearest access minute for each line or hunt group. FGB, FGC and FGD access minutes or fractions thereof, the exact value of the fraction being a function of the switch technology where the measurement is made, are accumulated over the billing period for each end office, and are then rounded up to the nearest access minute for each end office.

Assumed minutes are used for FGA services which originate or terminate in end offices not equipped with measurement capabilities.

The assumed average access minutes used for services originating or terminating in offices where measurement capability does not exist are set forth in (A) following for Feature Group A Services, and in (B) following for Feature Group B Services.

6. Switched Access Service (Cont'd)

6.7 Rate Regulations (Cont'd)

6.7.7 Measuring Access Minutes (Cont'd)

(A) Where originating and terminating measurement capability does not exist for Feature Group A provided to an entry switch, the number of access minutes will be assumed to be 4195 access minutes per line per month when the line is arranged for two way calling (1510 originating and 2685 terminating).

Where measurement capability exists for either originating or terminating usage, but not both, on a line arranged for two way calling, the number of access minutes per line per month will be an assumed 4195 or the measured usage, whichever is greater. If the usage in the measured direction exceeds 4195 access minutes per line per month, it will be assumed that there is zero usage in the unmeasured direction. If the measured usage is less than 4195 access minutes per line per month, the usage in the unmeasured direction will be the assumed usage for that unmeasured direction; the total of measured and assumed minutes not to exceed the total assumed usage of 4195 access minutes designated for two way calling. If the total exceeds 4195 access minutes the assumed minutes shall be reduced so that the total of measured and unmeasured minutes equals 4195 access minutes.

Additionally, when the line is arranged for one way calling and there is no measurement capability for that direction, 1510 access minutes per month will be assumed for originating calling only lines and 2685 access minutes per month will be assumed for terminating calling only lines.

6. Switched Access Service (Cont'd)

6.7 Rate Regulations (Cont'd)

6.7.7 Measuring Access Minutes (Cont'd)

(B) Where originating and terminating measurement capability does not exist for Feature Group B provided to an entry switch, the number of access minutes will be assumed to be 8700 access minutes per line per month when the trunk is arranged for two way calling (3132 originating and 5568 terminating).

Where measurement capability exists for either originating or terminating usage, but not both, on a trunk arranged for two way calling, the number of access minutes per trunk per month will be an assumed 8700 or the measured usage, whichever is greater. If the usage in the measured direction exceeds 8700 access minutes per trunk per month, it will be assumed that there is zero usage in the unmeasured direction. If the measured usage is less than 8700 access minutes per trunk per month, the usage in the unmeasured direction will be assumed usage for that unmeasured direction; the total of measured and assumed minutes not to exceed the total assumed usage of 8700 access minutes designated for two way calling. If the total exceeds 8700 access minutes the assumed minutes shall be reduced so that the total of measured and unmeasured minutes equals 8700 access minutes.

Additionally, when the trunk is arranged for one way calling and there is no measurement capability for that direction, 3132 access minutes per month will be assumed for originating calling only lines and 5568 access minutes per month will be assumed for terminating calling only lines.

6. Switched Access Service (Cont'd)

6.7 Rate Regulations (Cont'd)

6.7.7 Measuring Access Minutes (Cont'd)

(C) Feature Group A Usage Measurement

For originating calls over FGA, usage measurement begins when the originating FGA entry switch receives an off-hook supervisory signal forwarded from the customer's point of termination. This off-hook signal may be provided by the customer's equipment before the called party answers, or forwarded by the customer's equipment when the called party answers.

The measurement of originating call usage over FGA ends when the originating FGA entry switch receives an on-hook supervisory signal from either the originating end user's end office, indicating the originating end user has disconnected, or the customer's point of termination, whichever is recognized first by the entry switch.

For terminating calls over FGA, usage measurement begins when the terminating FGA entry switch receives an off-hook supervisory signal from the terminating end user's end office, indicating the terminating end user has answered. The measurement of terminating call usage over FGA ends when the terminating FGA entry switch receives an on-hook supervisory signal from either the terminating end user's end office, indicating the terminating end user has disconnected, or the customer's point of termination, whichever is recognized first by the entry switch.

(D) Feature Group B Usage Measurement

For originating calls over FGB, usage measurement begins when the originating FGB entry switch receives answer supervision forwarded from the customer's point of termination, indicating the customer's equipment has answered.

6. Switched Access Service (Cont'd)

6.7 Rate Regulations (Cont'd)

6.7.7 Measuring Access Minutes (Cont'd)

(D) Feature Group B Usage Measurement (Cont'd)

The measurement of originating call usage over FGB ends when the originating FGB entry switch receives disconnect supervision from either the originating end user's end office, indicating the originating end user has disconnected, or the customer's point of termination, whichever is recognized first by the entry switch.

For terminating calls over FGB, usage measurement begins when the terminating FGB entry switch receives answer supervision from the terminating end user's end office, indicating the terminating end user has answered.

The measurement of terminating call usage over FGB ends when the terminating FGB entry switch receives disconnect supervision from either the terminating end user's end office, indicating the terminating end user has disconnected, or the customer's point of termination, whichever is recognized first by the entry switch.

(E) Feature Group C Usage Measurement

For originating calls over FGC provided with Multi-Frequency Signaling, usage measurement begins when the originating FGC entry switch receives answer supervision from the customer's point of termination, indicating the called party has answered.

For originating calls over FGC provided with Signaling System 7 (SS7) Signaling when the FGC end office is not routed through an access tandem for connection to the customer, usage measurement begins when the SS7 Initial Address Message is sent from the Service Switching Point (SSP) to the Service Transfer Point (STP).

For originating calls over FGC provided with Signaling System 7 (SS7) Signaling when the FGC end office is routed through a tandem for connection to the customer, usage measurement begins when the FGC end office receives the SS7 Exit Message from the tandem.

6. Switched Access Service (Cont'd)

6.7 Rate Regulations (Cont'd)

6.7.7 Measuring Access Minutes (Cont'd)

(E) Feature Group C Usage Measurement (Cont'd)

The measurement of originating call usage over FGC provided with Multi-Frequency Signaling ends when the originating FGB entry switch receives disconnect supervision from either the originating end user's end office, indicating the originating end user has disconnected, or the customer's point of termination, whichever is recognized first by the entry switch.

The measurement of originating call usage over FGC provided with SS7 Signaling ends when the originating FGC end office receives an SS7 Release Message indicating either the originating or terminating end user has disconnected.

For terminating calls over FGC to services other than 500, 8XX, 900 or Directory Assistance, if terminating FGC usage is not directly measured at the terminating entry switch, then it is imputed from originating usage, excluding usage from calls to 500, 8XX, 900 or Directory Assistance Services.

For terminating calls over FGC with Multi-Frequency Signaling to 8XX Service, usage measurement begins when the terminating FGC entry switch receives answer supervision from the terminating end user's end office, indicating the terminating 8XX Service end user has answered.

The measurement of terminating call usage over FGC to 8XX Service ends when the terminating FGC entry switch receives an on-hook supervisory signal from the terminating end user's end office, indicating the terminating 8XX Service end user has disconnected, or from the customer's point of termination, whichever is recognized first by the entry switch.

For terminating calls over FGC with SS7 signaling, usage measurement begins when the terminating recording switch receives answer supervision from the terminating end user. The Telephone Company switch receives answer supervision and sends the indication to the customer in the form of an answer message. The measurement of terminating FGC call usage ends when the entry switch receives or sends Release Message, whichever occurs first.

6. Switched Access Service (Cont'd)

6.7 Rate Regulations (Cont'd)

6.7.7 Measuring Access Minutes (Cont'd)

(F) Feature Group D Usage Measurement

For originating calls over FGD provided with Multi-Frequency Signaling, usage measurement begins when the originating FGD entry switch receives the first wink supervisory signal forwarded from the customer's point of termination.

For originating calls over FGD provided with Signaling System 7 (SS7) Signaling when the FGD end office is not routed through an access tandem for connection to the customer, usage measurement begins when the SS7 Initial Address Message is sent from the Service Switching Point (SSP) to the Service Transfer Point (STP).

For originating calls over FGD provided with Signaling System 7 (SS7) signaling when the FGD end office is routed through a tandem for connection to the customer, usage measurement begins when the FGD end office receives the SS7 Exit Message from the tandem.

The measurement of originating call usage over FGD provided with Multi-Frequency Signaling ends when the originating FGD entry switch receives disconnect supervision from either the originating end user's end office, indicating the originating end user has disconnected, or the customer's point of termination, whichever is recognized first by the entry switch.

The measurement of originating call usage over FGD provided with SS7 Signaling ends when the originating FGD end office receives an SS7 Release Message indicating either the originating or terminating end user has disconnected.

6. Switched Access Service (Cont'd)

6.7 Rate Regulations (Cont'd)

6.7.7 Measuring Access Minutes (Cont'd)

(F) Feature Group D Usage Measurement (Cont'd)

For terminating calls over FGD provided with Multi-Frequency Signaling, the measurement of access minutes begins when the terminating FGD entry switch receives answer supervision from the terminating end user's end office, indicating the terminating end user has answered.

The measurement of terminating call usage over FGD ends when the terminating FGD entry switch receives disconnect supervision from either the terminating end user's end office, indicating the terminating end user has disconnected, or the customer's point of termination, whichever is recognized first by the entry switch.

For terminating calls over FGD with SS7 signaling, usage measurement begins when the terminating recording switch receives answer supervision from the terminating end user. The Telephone Company switch receives answer supervision and sends the indication to the customer in the form of an answer message. The measurement of terminating FGD call usage ends when the entry switch receives or sends a release message, whichever occurs first.

6. Switched Access Service (Cont'd)

6.7 Rate Regulations (Cont'd)

6.7.8 Network Blocking Charge for Feature Group D

The customer will be notified by the Telephone Company to increase its capacity (busy hour minutes of capacity or quantities of trunks) when excessive trunk group blocking occurs on groups carrying Feature Group D traffic and the measured access minutes for that hour exceed the capacity purchased. Excessive trunk group blocking occurs when the blocking thresholds stated below are exceeded. They are predicated on time consistent, hourly measurements over a 30 day period excluding Saturdays, Sundays and national holidays. If the order for additional capacity has not been received by the Telephone Company within 15 days of the notification, the Telephone Company will bill the customer, at the rate set forth in 6.8.1(D) following, for each overflow in excess of the blocking threshold when (1) the average "30 day period" overflow exceeds the threshold level for any particular hour and (2) the "30 day period" measured average originating or two-way usage for the same clock hour exceeds the capacity purchased.

Blocking Thresholds

Trunks in Service	1%	1/2%
1-2	.070	.045
3-4	.050	.035
5-6	.040	.025
7 or greater	.030	.020

The 1% blocking threshold is for transmission paths carrying traffic direct (without an alternate route) between an end office and a customer's premises. The ½% blocking threshold is for transmission paths carrying first routed traffic between an end office and a customer's premises via an access tandem.

6. Switched Access Service (Cont'd)

6.7 Rate Regulations (Cont'd)

6.7.9 Application of Rates for Extension Service

Feature Group A Switched Access Service is available with extensions, i.e., additional terminations of the service at different building(s) in the same or a different LATA. Feature Group A extensions within the LATA are provided and charged for under the Telephone Company's local and/or general exchange service tariffs. Feature Group A extensions in different LATAs are provided and charged for as Special Access Service. The rate elements which apply are: A Voice Grade Channel Termination, Channel Mileage, if applicable, and Signaling Capability (optional features and functions) if applicable. All appropriate monthly rates and nonrecurring charges set forth in 7.7 following will apply.

6.7.10 Message Unit Credit

Calls from end users to the seven digit local telephone numbers associated with Feature Group A Switched Access Service are subject to Telephone Company local and/or general exchange service tariff charges (including message unit and toll charges as applicable). The monthly bills rendered to customers for their Feature Group A Switched Access Service will include a credit to reflect any message unit charges collected from their end users under the Telephone Company's local and/or general exchange service tariffs. When the customer is provided FGA service where measurement capability does not exist, the credit will apply to access minutes not to exceed 1510 per line per month. No credit will apply for any terminating FGA access minutes. The message unit credit for originating access minutes will be based on the generally applicable message unit charges of the Telephone Company.

6.7.11 Local Information Delivery Services

Calls over Switched Access in the terminating direction to certain community information services will be rated under the applicable rates for Switched Access Service as set forth in 6.8 following. In addition, the charges per call as specified under the Telephone Company's local and/or general exchange service tariffs, e.g., 976 (DIAL-IT) Network Services, will also apply.

6. Switched Access Service (Cont'd)

6.7 Rate Regulations (Cont'd)

6.7.12 Mileage Measurement

The mileage to be used to determine the monthly rate for Local Transport is calculated on the airline distance between the end office switch, which may be a remote switching module, (where the call carried by Local Transport originates or terminates) and the customer's serving wire center. When Tandem-Switched Transport or Direct-Trunked Transport is ordered between the serving wire center and the end office, mileage is normally measured in one segment from the serving wire center to the end office. When Direct-Trunked Transport is ordered between a serving wire center and a tandem and Tandem-Switched Transport is ordered between the tandem and the end office, mileage is calculated separately for each segment. Exceptions to these methods are as set forth in (A) through (G) following. For SS7 signaling, the mileage to be used to determine the monthly rate for the Signaling Mileage Facility is calculated on the airline distance between the serving wire center associated with the customer's designated premises (Signaling Point of Interface) and the Telephone Company wire center providing the STP Port. Where applicable, the V&H coordinates method, is used to determine mileage. This method is set forth in the NATIONAL EXCHANGE CARRIER ASSOCIATION TARIFF F.C.C. NO. 4 for Wire Center Information (V&H coordinates).

Mileage rates are set forth in 6.8.1 following. To determine the rate to be billed, first compute the mileage using the V&H coordinates method. If the calculation results in a fraction of a mile, always round up to the next whole mile before determining the mileage and applying the rates. Then multiply the mileage by the appropriate rate.

Exceptions to the mileage measurement rules are as follows:

6. Switched Access Service (Cont'd)

6.7 Rate Regulations (Cont'd)

6.7.12 Mileage Measurement (Cont'd)

(A) The Local Transport mileage for originating or terminating Feature Group A Switched Access Service will be measured in two segments. Direct-Trunked Transport Facility mileage will be measured between the customer's serving wire center and the first point of switching (i.e., the end office switch where the Feature Group A switching dial tone is provided). Tandem-Switched Transport Facility mileage will be measured between the first point of switching and the originating or terminating end office.

(B) When the Alternate Traffic Routing optional feature is provided with Feature Groups C and D, the Local Transport access minutes will be apportioned between the two trunk groups used to provide this feature. Such apportionment will be made using: (1) actual minutes of use, if available, (2) standard Telephone Company traffic engineering methodology and will be based on the last trunk CCS desired for the high usage group, as described in 6.3.1(N) preceding, and the total busy hour minutes of capacity ordered to the end office, when the feature is provided at an end office switch, or to the subtending end offices when the feature is provided at an access tandem switch, or (3) a Percent Direct-Routed (PDR) provided by the customer and mutually agreed to by the Telephone Company for end offices that lack capability to measure overflow. This apportionment will serve as the basis for Local Transport calculation.

6. Switched Access Service (Cont'd)

6.7 Rate Regulations (Cont'd)

6.7.12 Mileage Measurement (Cont'd)

(D) When terminating Feature Group C Switched Access Service is provided from multiple customer designated premises to an end office not equipped with measurement capabilities, the total Local Transport access minutes for that end office will be apportioned among the trunk groups accessing the end office on the basis of the individual busy hour minutes of capacity ordered for each of those trunk groups. This apportionment will serve as the basis for Local Transport mileage calculation.

(E) Mileage for FGA and FGB where originating and/or terminating measurement capability does not exist, will be calculated in the unmeasured direction(s) on an airline basis using the V&H coordinates method. This mileage measurement will be between the first point of switching (end office switch where the switching dial tone is provided) for FGA and the access tandem or end office (to wherever the FGB Service is ordered) for FGB, and the customer's serving wire center for the Switched Access Services.

(F) The Local Transport mileage for Feature Groups B, C and D Switched Access Service provided to a remote office will be measured in multiple segments. When the facility is directly trunked to the host office, Direct-Trunked Facility mileage will be measured between the customer's serving wire center and the host office, and Tandem-Switched Facility mileage will be measured between the host office and the remote office. The Tandem Switching Charge will not apply.

When the facility is directly trunked to a tandem, Direct-Trunked Facility will be measured from the serving wire center to the tandem, Tandem-Switched Facility will be measured from the tandem to the host, and another segment of Tandem-Switched Facility will be measured from the host to the remote. A Tandem Switching Charge will be applicable at the tandem.

When service to the remote is ordered as only Tandem-Switched Facility, mileage will be separately measured between the serving wire center and the host and between the host and the end office. The Tandem Switching Charge will be applicable at the tandem.

(G) When multiplexing is performed at Telephone Company hubs, mileage is computed and rates applied separately for each segment of the Local Transport Direct-Trunked Facility (i.e., customer serving wire center to hub, hub to hub, and/or hub to end office).

6. Switched Access Service (Cont'd)

6.7 Rate Regulations (Cont'd)

6.7.13 Shared Use

Shared use occurs when Switched Access Service and Special Access Service are provided over the same High Capacity service through a common interface. The regulations governing the provision of Shared Use Facilities are set forth in 7.2.7 following.

6.7.14 Density Pricing Zones

A system of density pricing has been established wherein each serving wire center and each meet-point with another Telephone Company is assigned to a zone. Services designated as subject to competition may have rates and charges, as set forth in 6.8 following, that vary between zones for the same service.

Direct-Trunked Transport interoffice facilities (Direct-Trunked Transport Facility and Direct-Trunked Transport Termination) between serving wire centers, or between a serving wire center and a meet-point with another Telephone Company, in different density pricing zones shall be rated with the price from the highest priced zone associated with the specific circuit. For originating minutes, Tandem-Switched Transport (Tandem-Switched Transport Facility, Tandem-Switched Transport Termination, and Tandem Switching Charge) and Residual Interconnection Charge shall be rated with the price from the zone associated with the originating end user's serving wire center. For terminating minutes, Tandem-Switched Transport (Tandem-Switched Transport Facility, Tandem-Switched Transport Termination, and Tandem Switching Charge) and Residual Interconnection Charge shall be rated with the price from the zone associated with the terminating end user's serving wire center. Entrance Facility and other zoned switched access services are rated from the serving wire center to which they are connected.

Density pricing zones, applicable to serving wire centers, are identified in NATIONAL EXCHANGE CARRIER ASSOCIATION, INC. TARIFF F.C.C. NO. 4. Meet-points with another Telephone Company are assigned to density pricing zone 3.

6. Switched Access Service (Cont'd)

6.8 Rates and Charges

6.8.1 Local Transport

(A) Rates

(1) Density Pricing Zone 1

	USOC	Premium Rate
(a) Entrance Facility		
Per Termination		
- Voice Grade		
- 2-Wire	T6E2X	$ 16.17
- 4-Wire	T6E4X	25.97
- High Capacity DS1	TMECS	
Windstream Nebraska		84.50
Windstream of the Midwest		122.32
(b) Direct-Trunked Transport		
Facility Per Mile		
- Voice Grade	CMFV	$ 1.15
- High Capacity DS1	CMFT1	
Windstream Nebraska		11.49
Windstream of the Midwest		12.14
Termination		
Per Termination		
- Voice Grade	CMTV	$ 11.78
- High Capacity DS1	CMTT1	
Windstream Nebraska		133.00
Windstream of the Midwest		146.76
(c) Multiplexing		
Per Arrangement		
- DS1 to Voice	MQ1	
Windstream Nebraska		$377.90
Windstream of the Midwest		$353.03

(M)

(M)

RECEIVED
JUN 21 2017
NPSC-Comm. Dept.

Certain material previously found on this page is now located on Page 130.1.

ACCESS SERVICE

6. Switched Access Service (Cont'd)

6.8 Rates and Charges (Cont'd)

6.8.1 Local Transport (Cont'd)

(A) Rates (Cont'd)

(1) Density Pricing Zone 1

	USOC	Premium Rate	
(d) Tandem-Switched Transport Facility			(M)
Per Access Minute Per Mile			
Originating		$.000010	
Terminating			
- Windstream Nebraska		*	(C)
- Windstream of the Midwest		**	(C)
Termination			
Per Access Minute Per Facility Segment			
Originating		$.000140	
Terminating			
- Windstream Nebraska		*	(C)
- Windstream of the Midwest		**	(C)
Tandem Switching Charge			
Per Access Minute Per Tandem			
Originating		$.001760	
Terminating			
- Windstream Nebraska		*	(C)
- Windstream of the Midwest		**	(C)
(e) Residual Interconnection Charge Per Access Minute		$.000000	(M)

*Terminating per minute rates are billed at rates set forth in the Windstream Telephone System's FCC Tariff No. 6 found at: https://apps.fcc.gov/etfs/public/lecTariffs.action?idLec=154. (C)

**Terminating per minute rates are billed at rates set forth in the Windstream Communications of the Midwest FCC Tariff No. 1 found at: https://apps.fcc.gov/etfs/public/lecTariffs.action?idLec=238. (C)

Material now found on this page was previously located on Page 130.

RECEIVED
JUN 21 2017
NPSC-Comm. Dept.

6. Switched Access Service (Cont'd)

6.8 Rates and Charges (Cont'd)

6.8.1 Local Transport (Cont'd)

(A) Rates (Cont'd)

(1) Density Pricing Zone 1 (Cont'd)

	USOC	Nonrecurring Charge
(f) Installation		
- Per Line or Trunk		
- Voice Grade	T6E4X	$213.29
- High Capacity DS1	TMECS	
Windstream Nebraska		474.00
Windstream of the Midwest		840.46
Inside Move		
- Per Line or Trunk		
- Voice Grade	T6E4X	
Windstream Nebraska		$106.65
Windstream of the Midwest		107.43
- High Capacity DS1	TMECS	
Windstream Nebraska		237.00
Windstream of the Midwest		435.23
Monthly Nonrecurring USOC Rate Charge		
(g) Clear Channel Capability Per 1.544 Mbps Transmission Path CLR None Rate		$107.04
(h) Tandem Direct Trunk Port Per Termination		
- Voice Grade		
Windstream Nebraska		$ 1.80
Windstream of the Midwest		$ 1.25
- High Capacity DS1		
Windstream Nebraska		$ 1.75
Windstream of the Midwest		$29.90
(i) Tandem Switched Multiplexing Per Access Minute per Multiplexer Terminating		
Windstream Nebraska		* (C)
Windstream of the Midwest		** (C)

*Terminating per minute rates are billed at rates set forth in the Windstream Telephone System's FCC Tariff No. 6 found at: https://apps.fcc.gov/etfs/public/lecTariffs.action?idLec=154. (C) | (C)

**Terminating per minute rates are billed at rates set forth in the Windstream Communications of the Midwest FCC Tariff No. 1 found at: https://apps.fcc.gov/etfs/public/lecTariffs.action?idLec=238. (C) | (C)

RECEIVED
JUN 21 2017
NRSC Comm. Dept.

6. Switched Access Service (Cont'd)

6.8 Rates and Charges (Cont'd)

6.8.1 Local Transport (Cont'd)

(A) Rates (Cont'd)

(2) Density Pricing Zone 2

	USOC	Premium Rate	
(a) Entrance Facility			
Per Termination			
- Voice Grade			
- 2-Wire	T6E2X	$ 16.17	
- 4-Wire	T6E4X	25.97	
- High Capacity DS1 TMECS		84.50	
(b) Direct-Trunked Transport			
Facility Per Mile			
- Voice Grade	CMFV	$ 1.15	
- High Capacity DS1	CMFT1	11.49	
Termination			
Per Termination			
- Voice Grade	CMTV	$ 11.78	
- High Capacity DS1	CMTT1	133.00	
(c) Multiplexing			
Per Arrangement			
- DS1 to Voice	MQ1	$377.90	
(d) Tandem-Switched Transport			
Facility			
Per Access Minute Per Mile			
Originating		$.000036	
Terminating		*	(C)
Termination			
Per Access Minute Per Facility Segment			
Originating		$.000160	
Terminating		*	(C)
Tandem Switching Charge			
Per Access Minute Per Tandem			
Originating		$.001760	
Terminating		*	(C)
(e) Residual Interconnection Charge			
Per Access Minute		$.000000	

*Terminating per minute rates are billed at rates set forth in the Windstream Telephone System's FCC Tariff No. 6 found at: https://apps.fcc.gov/etfs/public/lecTariffs.action?idLec=154. (C)

(C)

RECEIVED
JUN 21 2017
NPSC-Comm. Dept.

6. Switched Access Service (Cont'd)

6.8 Rates and Charges (Cont'd)

6.8.1 Local Transport (Cont'd)

(A) Rates (Cont'd)

(2) Density Pricing Zone 2 (Cont'd)

	USOC	Nonrecurring Charge
(f) Installation		
- Per Line or Trunk		
- Voice Grade	T6E4X	$213.29
- High Capacity DS1	TMECS	474.00
Inside Move		
- Per Line or Trunk		
- Voice Grade	T6E4X	$106.65
- High Capacity DS1	TMECS	237.00
Monthly Nonrecurring USOC Rate Charge		

(g) Clear Channel	USOC	Monthly Rate	Nonrecurring Charge
Capability Per 1.544 Mbps Transmission Path CLR None Rate	CLR	None	$107.04

	Rate
(h) Tandem Direct Trunk Port Per Termination	
- Voice Grade	
Windstream Nebraska	$ 1.80
Windstream Nebraska of the Midwest	$ 1.25
- High Capacity DS1	
Windstream Nebraska	$ 1.75
Windstream Nebraska of the Midwest	$29.90
(i) Tandem Switched Multiplexing Per Access Minute per Multiplexer Terminating	
Windstream Nebraska	* (C)
Windstream Nebraska of the Midwest	** (C)

*Terminating per minute rates are billed at rates set forth in the Windstream Telephone System's FCC Tariff No. 6 found at: https://apps.fcc.gov/etfs/public/lecTariffs.action?idLec=154. (C)

**Terminating per minute rates are billed at rates set forth in the Windstream Communications of the Midwest FCC Tariff No. 1 found at: https://apps.fcc.gov/etfs/public/lecTariffs.action?idLec=238. (C)

RECEIVED
JUN 21 2017
NPSC-Comm. Dept.

6. Switched Access Service (Cont'd)

6.8 Rates and Charges (Cont'd)

6.8.1 Local Transport (Cont'd)

(A) Rates (Cont'd)

(3) Density Pricing Zone 3

	USOC	Premium Rate	
(a) Entrance Facility			
Per Termination			
- Voice Grade			
- 2-Wire	T6E2X	$ 16.17	
- 4-Wire	T6E4X	25.97	
- High Capacity DS1	TMECS	119.23	
(b) Direct-Trunked Transport			
Facility Per Mile			
- Voice Grade	CMFV	$ 1.15	
- High Capacity DS1	CMFT1	12.38	
Termination			
Per Termination			
- Voice Grade	CMTV	$ 11.78	
- High Capacity DS1	CMTT1	168.54	
(c) Multiplexing			
Per Arrangement			
- DS1 to Voice	MQ1	$377.90	
(d) Tandem-Switched Transport			
Facility			
Per Access Minute Per Mile			
Originating		$.000622	
Terminating		*	(C)
Termination			
Per Access Minute Per Facility Segment			
Originating		$.002550	
Terminating		*	(C)
Tandem Switching Charge			
Per Access Minute Per Tandem			
Originating		$.001760	
Terminating		*	(C)
(e) Residual Interconnection Charge			
Per Access Minute			
- Premium		$.000000	
- Transitional (Non-Premium)		$.000000	

*Terminating per minute rates are billed at rates set forth in the Windstream Telephone System's FCC Tariff No. 6 found at: https://apps.fcc.gov/etfs/public/lecTariffs.action?idLec=154. (C) | (C)

RECEIVED
JUN 21 2017
NPSC-Comm. Dept.

6. Switched Access Service (Cont'd)

6.8 Rates and Charges (Cont'd)

6.8.1 Local Transport (Cont'd)

(A) Rates (Cont'd)

(3) Density Pricing Zone 3 (Cont'd)

	USOC	Nonrecurring Charge
(f) Installation		
- Per Line or Trunk		
- Voice Grade	6E4X	213.29
- High Capacity DS1	MECS	74.00
Inside Move		
- Per Line or Trunk		
- Voice Grade	6E4X	106.65
- High Capacity DS1	MECS	37.00
Monthly Nonrecurring USOC Rate Charge		
(g) Clear Channel Capability Per 1.544 Mbps Transmission Path CLR None Rate		107.04
(h) Tandem Direct Trunk Port Per Termination		
- Voice Grade		
Windstream Nebraska		1.80
Windstream of the Midwest		1.25
- High Capacity DS1		
Windstream Nebraska		1.75
Windstream of the Midwest		29.90
(i) Tandem Switched Multiplexing Per Access Minute per Multiplexer Terminating		
Windstream Nebraska		* (C)
Windstream of the Midwest		** (C)

*Terminating per minute rates are billed at rates set forth in the Windstream Telephone System's FCC Tariff No. 6 found at: https://apps.fcc.gov/etfs/public/lecTariffs.action?idLec=154. (C)

**Terminating per minute rates are billed at rates set forth in the Windstream Communications of the Midwest FCC Tariff No. 1 found at: https://apps.fcc.gov/etfs/public/lecTariffs.action?idLec=238. (C)

RECEIVED
JUN 21 2017
NPSC-Comm. Dept.

ACCESS SERVICE

6. Switched Access Service (Cont'd)

6.8 Rates and Charges (Cont'd)

6.8.1 Local Transport (Cont'd)

(B) High Capacity DS3

(1) Density Pricing Zone 1

	USOC	Premium Rate	
(a) Entrance Facility Per Termination			
- Electrical Interface	EF2XX		
Windstream Nebraska		$1,182.00	(T)(R)
Windstream of the Midwest		1,446.41	(T)(I)
- Optical Interface	EF20X		
Windstream Nebraska		$1,205.00	(T)(R)
Windstream of the Midwest		1,474.65	(T)(I)
(b) Direct-Trunked Transport Facility Per Mile	CMFT3		
Windstream Nebraska		$ 114.95	(T)(R)
Windstream of the Midwest		121.04	(T)(I)
Termination Per Termination	CMTT3		
Windstream Nebraska		$ 510.00	(T)(R)
Windstream of the Midwest		528.54	(T)(R)
(c) Multiplexing DS3 to DS1 Per Arrangement	MKW3X		
Windstream Nebraska		$ 279.89	(T)(R)
Windstream of the Midwest		293.52	(T)(I)

RECEIVED
MAY - 9 2013
NPSC Comm. Dept.

6. Switched Access Service (Cont'd)

6.8 Rates and Charges (Cont'd)

6.8.1 Local Transport (Cont'd)

(B) High Capacity DS3 (Cont'd)

(1) Density Pricing Zone 1 (Cont'd)

	USOC	Nonrecurring Charge	
(d) Installation			
- Per Line or Trunk			
- Electrical Interface	EF2XX		
Windstream Nebraska		$430.00	(T)
Windstream of the Midwest		423.86	(T)(R)
- Optical Interface	EF20X		
Windstream Nebraska		$430.00	(T)
Windstream of the Midwest		423.86	(T)(R)
(e) Inside Move			
- Per Line or Trunk			
- Electrical Interface	EF2XX		
Windstream Nebraska		$215.00	(T)
Windstream of the Midwest		211.93	(T)(R)
- Optical Interface	EF20X		
Windstream Nebraska		$215.00	(T)
Windstream of the Midwest		211.93	(T)(R)

RECEIVED
MAY - 9 2013
NPSC Comm. Dept.

6. Switched Access Service (Cont'd)

6.8 Rates and Charges (Cont'd)

6.8.1 Local Transport (Cont'd)

(B) High Capacity DS3 (Cont'd)

(2) Density Pricing Zone 2

	USOC	Premium Rate	
(a) Entrance Facility Per Termination			
- Electrical Interface	EF2XX	$1,198.00	(R)
- Optical Interface	EF20X	$1,217.00	
(b) Direct-Trunked Transport Facility Per Mile	CMFT3	$ 114.94	
Termination Per Termination	CMTT3	$ 510.00	
(c) Multiplexing DS3 to DS1 Per Arrangement	MKW3X	$ 279.89	(R)

RECEIVED
MAY - 9 2013
NPSC-Comm. Dept.

6. Switched Access Service (Cont'd)

6.8 Rates and Charges (Cont'd)

6.8.1 Local Transport (Cont'd)

(B) High Capacity DS3 (Cont'd)

(2) Density Pricing Zone 2 (Cont'd)

	USOC	Nonrecurring Charge
(d) Installation		
- Per Line or Trunk		
- Electrical Interface	EF2XX	$430.00
- Optical Interface	EF20X	$430.00
(e) Inside Move		
- Per Line or Trunk		
- Electrical Interface	EF2XX	$215.00
- Optical Interface	EF20X	$215.00

6. Switched Access Service (Cont'd)

6.8 Rates and Charges (Cont'd)

6.8.1 Local Transport (Cont'd)

(B) High Capacity DS3 (Cont'd)

(3) Density Pricing Zone 3

	USOC	Premium Rate	
(a) Entrance Facility Per Termination			
- Electrical Interface	EF2XX	$1,474.00	(R)
- Optical Interface	EF20X	$1,516.00	
(b) Direct-Trunked Transport Facility Per Mile	CMFT3	$ 129.44	
Termination Per Termination	CMTT3	$ 646.28	
(c) Multiplexing DS3 to DS1 Per Arrangement	MKW3X	$ 279.89	(R)

RECEIVED
MAY - 9 2013
NPSC Comm. Dept.

ACCESS SERVICE

6. Switched Access Service (Cont'd)

6.8 Rates and Charges (Cont'd)

6.8.1 Local Transport (Cont'd)

(B) High Capacity DS3 (Cont'd)

(3) Density Pricing Zone 3 (Cont'd)

	USOC	Nonrecurring Charge
(d) Installation		
- Per Line or Trunk		
- Electrical Interface	EF2XX	$430.00
- Optical Interface	EF20X	$430.00
(e) Inside Move		
- Per Line or Trunk		
- Electrical Interface	EF2XX	$215.00
- Optical Interface	EF20X	$215.00

6. Switched Access Service (Cont'd)

6.8 Rates and Charges (Cont'd)

6.8.1 Local Transport (Cont'd)

(C) Common Channel Signaling Network Connection

(1) Signaling Network Access Link

	Monthly Rate	Nonrecurring Charge	
- Signaling Mileage Facility per mile	$ 1.70		
- Signaling Mileage Termination per termination	$13.00		
- Signaling Entrance Facility per STP Facility	$56.50	$235.00	
(2) STP Port - per port	$765.00		
(3) FGC and FGD Conversion of MF to SS7 Signaling or SS7 to MF Signaling - Per 24 Trunks Converted or Fraction Thereof on a Per Order Basis		$112.00	(R)

RECEIVED
MAY - 9 2013
NPSC Comm. Dept.

6. Switched Access Service (Cont'd)

6.8 Rates and Charges (Cont'd)

6.8.1 Local Transport (Cont'd)

(D) Chargeable Optional Features

(1) CIC and OZZ Signaling Information (COSI)

	USOC	Nonrecurring Charge
Multifrequency (MF) Signaling + - Per customer's initial order	XSSMF	$1,971.67
CCS/SS7 Signaling + (requires STP interconnection) - Per customer's initial order	XSSS7	$1,971.67

	Rate Per Call Blocked
(2) Network Blocking Charge +	$0.012304

(E) Nonchargeable Optional Features

		FID
(1) Supervisory Signaling		
DX Supervisory Signaling arrangement - Per Transmission Path*	NCI	++DX+
SF Supervisory Signaling arrangement - Per Transmission Path**	NCI	++SF+
E&M Type 1 Supervisory Signaling arrangement - Per Transmission Path*	NCI	++EA+
E&M Type II Supervisory Signaling arrangement - Per Transmission Path*	NCI	++EB+

\+ Applies to FGD
* Available with Interface Groups 1 and 2.
** Available with Interface Groups 2 and 6 through 10.

6. Switched Access Service (Cont'd)

6.8 Rates and Charges (Cont'd)

6.8.1 Local Transport (Cont'd)

(E) Nonchargeable Optional Features (Cont'd)

		FID
(1) Supervisory Signaling (Cont'd)		
E&M Type III Supervisory Signaling - Per Transmission Path*	NCI	++EC+
Tandem Supervisory Signaling - Per Transmission Path**	NCI	++EX+
(2) Customer specification of the receive transmission level at the first point of switching within a range acceptable to the Telephone Company - Per Transmission Path***	TLV	
(3) Customer specification of Local Transport Termination Four-wire termination in lieu of two-wire termination - Per Transmission Path****		LT1++

* Available with Interface Groups 1 and 2 for FGC and FGD.
** Available with Interface Group 2 for FGA.
*** Available with Interface Groups 2 through 10 for FGA and FGB. The range of transmission levels which may be specified is described in Technical Reference PUB 62500.
**** Available with Feature Group B with type B Transmission Performance.

6. Switched Access Service (Cont'd)

6.8 Rates and Charges (Cont'd)

6.8.2 End Office

(A) Switching

Premium

	Rates Per Access Minute	
LS1 - Feature Groups A & B (except) Feature Group B utilized for the provision of MTS/WATS service)		
Windstream Nebraska, Inc.		
- Originating	$0.0039400	
- Terminating	*	(C)
Windstream of the Midwest, Inc.		
- Originating	$0.0039400	(C)
- Terminating	**	
LS2 - Feature Groups C & D (including Feature Group B when utilized for the provision of MTS/WATS service)		
Windstream Nebraska, Inc.		
- Originating	$0.0039400	
- Terminating	*	(C)
Windstream of the Midwest, Inc.		
- Originating	$0.0039400	
- Terminating	**	(C)
Transitional Non-Premium Per Access Minute		
- Originating	$0.001773	
- Terminating	$0.000000	

*Windstream Nebraska's terminating per minute rates are billed at rates set forth in the Windstream Telephone System's FCC Tariff No. 6 found at: https://apps.fcc.gov/etfs/public/lecTariffs.action?idLec=154. (C)

**Windstream of the Midwest's terminating per minute rates are billed at rates set forth in the Windstream Communications of the Midwest FCC Tariff No. 1 found at: https://apps.fcc.gov/etfs/public/lecTariffs.action?idLec=238. (C)

RECEIVED
JUN 21 2017
NPSC-Comm. Dept.

6. Switched Access Service (Cont'd)

6.8 Rates and Charges (Cont'd)

6.8.2 End Office (Cont'd)

(A) Switching (Cont'd)

(1) Local Switching

(a) Common Switching Nonchargeable Optional Features	FID
Call Denial on Line or Hunt Group (available with FGA) - Per Transmission Path or Transmission Path Group	CAD
Service Code Denial on Line or Hunt Group (available with FGA) - Per Transmission Path or Transmission Path Group	SCD
Hunt Group Arrangement (available with FGA) - Per Transmission Path Group	HML/HTG
Uniform Call Distribution Arrangement (available with FGA) - Per Transmission Path Group	HTY UD
Nonhunting Number for Use with Hunt Group Arrangement or Uniform Call Distribution Arrangement (available with FGA) - Per Transmission Path	NHN

ACCESS SERVICE

6. Switched Access Service (Cont'd)

6.8 Rates and Charges (Cont'd)

6.8.2 End Office (Cont'd)

(A) Switching (Cont'd)

(1) Local Switching (Cont'd)

(a)	Common Switching Nonchargeable Optional Features (Cont'd)	FID
	Automatic Number Identification (available with FGB, FGC and FGD) - Per Transmission Path Group	ANI
	Up to 7 Digit Outpulsing of Access Digits to Customer (available with FGB) - Per Transmission Path Group	USDO
	Revertive Pulse Address Signaling (available with FGC) - Per Transmission Path Group	ADS RP
	Delay Dial Start-Pulsing Signaling (available with FGC) - Per Transmission Path Group	DDSP

6. Switched Access Service (Cont'd)

6.8 Rates and Charges (Cont'd)

6.8.2 End Office (Cont'd)

(A) Switching (Cont'd)

(1) Local Switching (Cont'd)

(a) Common Switching Nonchargeable Optional Features (Cont'd)	FID
Immediate Dial Pulse Address Signaling (available with FGC) - Per Transmission Path Group	ADS IDP
Dial Pulse Address Signaling (available with FGC) - Per Transmission Path Group	ADS DP
Panel Call Indicator Address Signaling (available with FGC) - Per Transmission Path Group	ADS PCI
Service Class Routing (available with FGC and FGD) - Per Transmission Path Group	SCRT
Alternate Traffic Routing (available with FGC and FGD) - Per Transmission Path Group	ARTG

ACCESS SERVICE

6. Switched Access Service (Cont'd)

6.8 Rates and Charges (Cont'd)

6.8.2 End Office (Cont'd)

(A) Switching (Cont'd)

(1) Local Switching (Cont'd)

(a) Common Switching Nonchargeable Optional Features (Cont'd)	FID
Trunk Access Limitation Arrangement (available with FGC and FGD) - Per End Office	CHOK
Call Gapping Arrangement (available with FGD) - Per End Office	CGAP
International Carrier Option (available with FGD) - Per End Office and Access Tandem	INCO
Band Advance Arrangement for Use with Special Access Service utilized in the provision of WATS or WATS-type Services (available with FGC and FGD) - Per Arrangement	BAAD

6. Switched Access Service (Cont'd)

6.8 Rates and Charges (Cont'd)

6.8.2 End Office (Cont'd)

(A) Switching (Cont'd)

(1) Local Switching (Cont'd)

(a) Common Switching Nonchargeable Optional Features (Cont'd)	FID
End Office End User Line Service Screening for Use with WATS Access Lines (available with FGC and FGD) - Per Transmission Path	BAND
Hunt Group Arrangement for Use with Special Access Service utilized in the provision of WATS or WATS-type Services (available with FGC and FGD) - Per Transmission Path Group	HML/HTG
Uniform Call Distribution Arrangement for Use with Special Access Service utilized in the provision of WATS or WATS-type Services (available with FGC and FGD) - Per Transmission Path Group	HTY UD
Nonhunting Number for Use with Hunt Group Arrangement or Uniform Call Distribution Arrangement for Use with Special Access Service utilized in the provision of WATS or WATS-type Services (available with FGC and FGD) - Per Transmission Path	NHN

6. Switched Access Service (Cont'd)

6.8 Rates and Charges (Cont'd)

6.8.2 End Office (Cont'd)

(A) Switching (Cont'd)

(1) Local Switching (Cont'd)

(b) Transport Termination Nonchargeable Options

		FID
(i) Line Side Terminations (For FGA)		
Two Way Operation		
- Dial Pulse with Loop Start	NC	+++A
- Dial Pulse with Ground Start	NC	+++E
- DTMF with Loop Start	NC	+++F
- DTMF with Ground Start	NC	+++G
Terminating Operation		
- Dial Pulse with Loop Start	NC	+++N
- Dial Pulse with Ground Start	NC	+++P
- DTMF with Loop Start	NC	+++R
- DTMF with Ground Start	NC	+++S
Originating Operation		
- Loop Start	NC	+++U
- Ground Start	NC	+++V

6. Switched Access Service (Cont'd)

6.8 Rates and Charges (Cont'd)

6.8.2 End Office (Cont'd)

(A) Switching (Cont'd)

(1) Local Switching (Cont'd)

(b) Transport Termination Nonchargeable Options

	FID	
(ii) Trunk Side Terminations (For FGB, FGC and FGD)		
Standard Trunk for Originating, Terminating or Two-Way Operation (available with FGB, FGC and FGD)	TTC TTC TTC	SO ST TY
Rotary Dial Station Signaling Trunk (available with FGB)	TTC	RD
Operator Trunk, Coin, Non-Coin or Combined Coin and Non-Coin (available with FGC)	TTC	CO
Operator Trunk, Full Feature Arrangement (available with FGD)	TTC	FF

ACCESS SERVICE

6. Switched Access Service (Cont'd)

6.8 Rates and Charges (Cont'd)

6.8.2 nd Office (Cont'd)

(A) Switching (Cont'd)

(2) Line Terminations

(a) Line Side Terminations:		FID
Originating Loop Start, Line Side Connection, with DTMF Address Signaling - Per Transmission Path	NC	+++R
Originating Loop Start, Line Side Connection, with Dial Pulse Address Signaling - Per Transmission Path	NC	+++N
Originating Ground Start, Line Side Connection, with DTMF Address Signaling - Per Transmission Path	NC	+++S

ACCESS SERVICE

6. Switched Access Service (Cont'd)

6.8 Rates and Charges (Cont'd)

6.8.2 End Office (Cont'd)

(A) Switching (Cont'd)

(2) Line Terminations (Cont'd)

(a) Line Side Terminations: (Cont'd)	FID	
Originating Ground Start, Line Side Connection, with Dial Pulse Address Signaling - Per Transmission Path	NC	+++P
Terminating Loop Start, Line Side Connection - Per Transmission Path	NC	+++U
Terminating Ground Start, Line Side Connection - Per Transmission Path	NC	+++V
(b) Trunk Side Terminations:		
Terminating Trunk Side Connection for Forwarding of Dialed Number Identification to End User - Per Transmission Path	NC	+++T

ACCESS SERVICE

6. Switched Access Service (Cont'd)

6.8 Rates and Charges (Cont'd)

6.8.2 End Office (Cont'd)

(B) Directory Assistance Information Surcharge

	Premium	Transitional
- per 100 Access Minutes		
- Originating	$0.037682	$0.016957
- Terminating	$0.000000	$0.000000

	Rate	
(C) End Office Common Trunk Port Per Access Minute		
Windstream of the Midwest, Inc.		
- Terminating	$0.000000	(R)
(D) End Office Direct Trunk Port Per Trunk Port		
Windstream Nebraska		
- Voice Grade	$1.25	
- DS1	$0.73	
Windstream of the Midwest, Inc.		
- Voice Grade	$ 0.00	
- DS1	$ 3.00	(R)

6.8.3 500 and 900 NXX Access Service Translation Optional Feature

	USOC	Nonrecurring Charge Per Order
(A) Per 900 NXX translation for initial or subsequent order to add or change NXX translation codes	90FT	$114.60
(B) Per 500 NXX translation for initial or subsequent order to add or change NXX translation codes	50FT	$145.83

RECEIVED
JUL 20 2016
NPSC-Comm. Dept.

ACCESS SERVICE

6. Switched Access Service (Cont'd)

6.8 Rates and Charges (Cont'd)

6.8.5 Billing Name and Address

	Rate per Telephone Number Listing Requested
BNA - $15 per month minimum charge	$ .70000000

6.8.6 Operator Transfer Service

	Rate
Per Call Transferred	$0.456

7. Special Access Service

7.1 General

Special Access Service provides a transmission path to connect customer designated premises*, directly, through a Telephone Company hub where bridging or multiplexing functions are performed, or to connect a customer designated premises and a WATS Serving Office. Special Access Service includes all exchange access not utilizing Telephone Company end office switches.

The connections provided by Special Access Service can be either analog or digital. Analog connections are differentiated by spectrum and bandwidth. Digital connections are differentiated by bit rate.

7.1.1 Channel Types

There are six types of channels used to provide Special Access Services. Each type has its own characteristics. All are subdivided by one or more of the following:

- Transmission specifications,
- Bandwidth
- Speed (i.e., bit rate),
- Spectrum

Customers can order a basic channel and select from a list of available transmission parameters and channel interfaces those that they desire to meet specific communications requirements.

For purposes of ordering channels, each has been identified as a type of Special Access Service. However, such identification is not intended to limit a customer's use of the channel nor to imply that the channel is limited to a particular use. For example, if a customer's equipment is capable of transmitting voice over a channel that is identified as a Metallic Service in this tariff, there is no restriction against doing so.

* Telephone Company Centrex CO and CO-like switches are considered to be a customer designated premises for purposes of this tariff.

7. Special Access Service

7.1 General (Cont'd)

7.1.1 Channel Types (Cont'd)

Following is a brief description of each type of channel:

Metallic - a channel for the transmission of low speed varying signals at rates up to 30 baud.

Telegraph Grade - a channel for the transmission of binary signals at rates of 0 to 75 baud or 0 to 150 baud.

Voice Grade - a channel for the transmission of analog signals within an approximate bandwidth of 300 to 3000 Hz.

Video - a channel for the transmission of standard 525 line 60 field monochrome or National Television Systems Committee color video signal and one or two associated 5 or 15 kHz audio signals. The bandwidth is either 30 Hz to 4.5 MHz or 30 Hz to 6.6 MHz.

Digital Data - a channel for the digital transmission of synchronous serial data at rates of 2.4, 4.8, 9.6, 19.2, 56.0 or 64.0 kbps.

High Capacity - a channel for the transmission of isochronous serial digital data at rates of 1.544 or 44.736 Mbps.

7. Special Access Service (Cont'd)

7.1 General (Cont'd)

7.1.1 Channel Types (Cont'd)

Detailed descriptions of each of the channel types are provided in 7.5 through 7.10 following.

The customer also has the option of ordering Voice Grade and High Capacity facilities (i.e., 1.544 Mbps and 44.736 Mbps) to a Telephone Company hub for multiplexing to individual channels of a lower capacity or bandwidth. Descriptions of the types of multiplexing available at the hubs, as well as the number of individual channels which may be derived from each type of facility are set forth in 7.7 and 7.10 following. Additionally, the customer may specify optional features for the individual channels derived from the facility to further tailor the channel to meet specific communications requirements. Descriptions of the optional features and functions available are set forth in 7.2.1 (C) following.

For example, a customer may order a 44.736 Mbps High Capacity channel from a customer designated premises to a Telephone Company hub for multiplexing to twenty-eight (28) 1.544 Mbps channels. The 1.544 Mbps channels may be further multiplexed at the same or a different hub to Voice Grade channels or may be extended to other customer designated premises or hubs. Optional features may be added to either the 1.544 Mbps or the Voice Grade channels.

7. Special Access Service (Cont'd)

7.1 General (Cont'd)

7.1.2 Service Descriptions

For the purposes of ordering, there are six categories of Special Access Service. These are:

Metallic (MT)
Telegraph Grade (TG)
Voice (VG)
Video (TV)
Digital Data (DA)
High Capacity (HC)

Each service consists of a basic channel to which a technical specifications package (customized or predefined), channel interface(s) and, when desired, optional features and functions are added to construct the service desired by the customer. Technical specifications packages and optional features and functions are described in this section. Channel interfaces are described in 15.3 and 15.4 following.

Customized technical specifications packages will be provided where technically feasible. If the Telephone Company determines that the requested parameter specifications are not compatible, the customer will be advised and given the opportunity to change the order.

When a customized channel is ordered the customer will be notified whether Additional Engineering Charges apply. In such cases, the customer will be given an estimate of the hours to be billed before any further action is taken on the order.

The channel description specifies the characteristics of the basic channel and indicates whether the channel is provided between customer designated premises, between a customer designated premises and a Telephone Company hub where bridging or multiplexing functions are performed, or between a customer designated premises and a WATS Serving Office.

7. Special Access Service (Cont'd)

7.1 General (Cont'd)

7.1.2 Service Descriptions Cont'd

(A) Information pertaining to the technical specifications packages indicates the transmission parameters that are available with each package. This information is displayed in a matrix with the transmission parameters listed down the left side and the packages listed across the top. Each package is identified by a code, e.g., VGC. The first two letters of the code indicate the category of Special Access Service to which the parameters are applicable. These two letter codes are shown above in parentheses following the category of Special Access Service. The letter "C" following the two letter code indicates the technical specifications package for a customized service. The letter "w" following the two letter code indicates the technical specifications package for a voice grade Special Access Service used in the provision of WATS or WATS-type service using a Telephone Company designated WATS Serving Office. A numeric or alpha-numeric designation following the two letter code indicates the specific predefined package. For a customized service, the customer may select any parameters available with that category of service as long as the parameters are compatible. When appropriate, the Technical Reference which contains detailed specifications for the parameters is shown following the matrix.

(B) Channel interfaces at each Point of Termination on a two-point service may be symmetrical or asymmetrical. On a multipoint service they may also by symmetrical or asymmetrical, but communications can only be provided between compatible interfaces. Only certain channel interfaces are compatible. These are set forth in 15.3 and 15.4 following, in a combination format.

(C) Only certain channel interface combinations are available with the predefined technical specifications packages. These are delineated in the Technical References set forth in (F) following. When a customized channel is requested, all channel interface combinations available with the specified type of service are available with the customized channel.

7. Special Access Service (Cont'd)

7.1 General (Cont'd)

7.1.2 Service Descriptions (Cont'd)

(D) The optional features and functions available with each type of Special Access Service are described in this section. The optional features and functions information also indicates with which technical specifications packages they are available. Such information is displayed in a matrix with the optional feature or function listed down the left side and the technical specifications package listed across the top.

(E) The Telephone Company will maintain existing transmission specifications on services installed prior to the effective date of this tariff, except that existing services with performance specifications exceeding the standards listed in this provision will be maintained at the performance levels specified in this tariff.

(F) All services installed after the effective date of this tariff will conform to the transmission specification standards contained in this tariff or in the following Technical References for each category of service:

Metallic	TR-NPL-000336
Telegraph Grade	TR-NPL-000336
Voice Grade	TR-NPL-000335 PUB 41004, Table 4
Video	TR-NPL-000338
Digital Data	TR-NPL-000341, Bellcore PUB 62310 AT&T PUB 62310, INC Bulletin CB-INC-100
High Capacity	PUB 62411 TA-TSY-000342

(G) Digital Services interconnections allows the customer to configure his or her digital services. Interconnection is only available at those end offices at which the services to be interconnected are available. The allowable interconnections and the end offices providing digital services are identified in the local Windstream Nebraska, Inc., Digital Services Catalog.

7.1.3 Service Configurations

There are two types of service configurations over which Special Access Services are provided: two-point service and multipoint service.

7. Special Access Service (Cont'd)

7.1 General (Cont'd)

7.1.3 Service Configurations (Cont'd)

(A) Two-Point Service

A two-point service connects two customer designated premises, either on a directly connected basis or through a hub where multiplexing functions are performed, or a customer designated premises and a WATS Serving Office (WSO).

Applicable rate elements are:
- Channel Terminations
- Channel Mileage (as applicable)
- Optional Features and Functions (when applicable)

A Special Access Surcharge, as set forth in 7.3 following and a Message Station Equipment Recovery Charge, as set forth in 7.4 following, may be applicable.

The following diagram depicts a two-point Voice Grade service connecting two customer designated premises (CDP) located 15 miles apart. The service is provided with C-Type conditioning.

CDP - Customer Designated Premises
CSWC - Customer Serving Wire Center

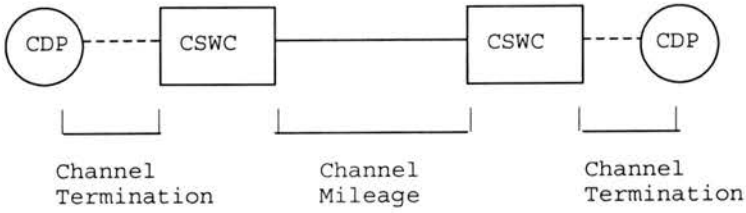

Applicable rate elements are:

- Channel Terminations (applicable one (1) per CDP)
- Channel Mileage (1 section, Channel Mileage Facility per mile plus 2 Channel Mileage Terminations)
- C-Type Conditioning Optional Feature

7. Special Access Service (Cont'd)

7.1 General (Cont'd)

7.1.3 Service Configurations (Cont'd)

(B) Multipoint Service

Multipoint service connects three or more customer designated premises through a Telephone Company hub. Only certain types of Special Access Service are provided as multipoint service. These are so designated in the descriptions for the appropriate channel.

The channel between hubs (i.e., bridging locations) on a multipoint service is a mid-link. There is no limitation on the number of mid-links available with a multi point service. However, when more than three mid-links in tandem are provided the quality of the overall service may be degraded.

Multipoint service utilizing a customized technical specifications package, as set forth in 7.1.2 preceding, will be provided when technically possible. If the Telephone Company determines that the requested characteristics for a multipoint service are not compatible, the customer will be advised and given the opportunity to change the order.

When ordering, the customer will specify the desired bridging hub(s). EXCHANGE CARRIER ASSOCIATION TARIFF F.C.C. NO. 4 identifies serving wire centers, hub locations and the type of bridging functions available.

Applicable Rate Elements are:

- Channel Terminations (one per customer designated premises)
- Channel Mileage (as applicable between the serving wire center for each customer designated premises and the hub and between hubs).
- Bridging
- Additional Optional Features and Functions (when applicable)

7. Special Access Service (Cont'd)

7.1 General (Cont'd)

7.1.3 Service Configurations (Cont'd)

(B) Multipoint Service (Cont'd)

The Special Access Surcharge, as set forth in 7.3 following, and a Message Station Equipment Recovery Charge, as set forth in 7.4 following, may be applicable.

Example: Voice Grade multipoint service connecting four customer designated premises (CDP) via two customer specified bridging hubs.

CDP - Customer Designated Premises
HSWC - Hub Serving Wire Center
CSWC - Customer Serving Wire Center

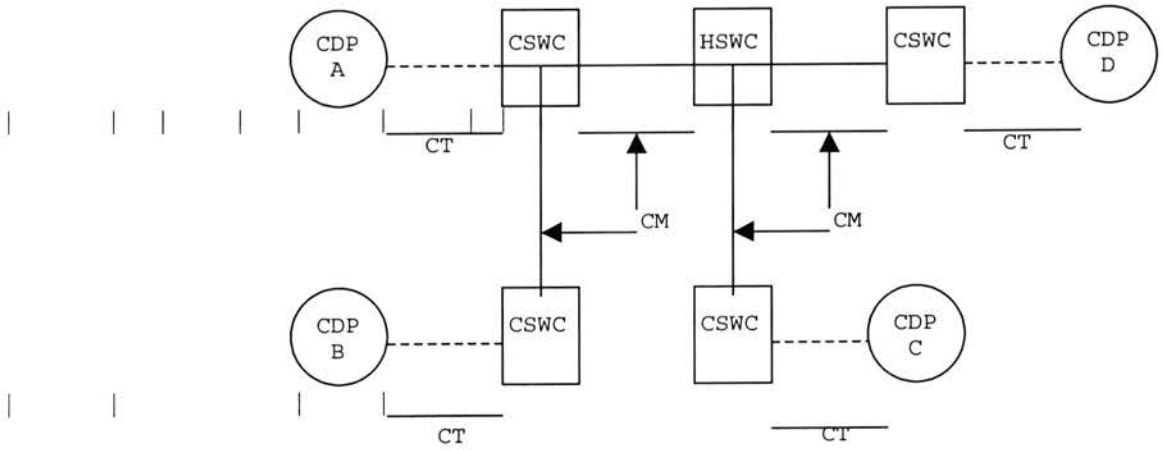

CT - Channel Termination
CM - Channel Mileage
• - Hub Bridging

Applicable rate elements are:
- Channel Terminations (4 applicable)
- Channel Mileage (4 sections, Channel Mileage Facility per mile plus 2 Channel Mileage Terminations per section)
- Bridging Optional Feature (6 applicable, i.e., each bridge port)

7. Special Access Service (Cont'd)

7.1 General (Cont'd)

7.1.4 Alternate Use

Alternate Use occurs when a service is arranged by the Telephone Company so that the customer can select different types of transmission at different times. A customer may use a service in any privately beneficial manner. However, where technical or engineering changes are required to effectuate an alternate use, the Telephone Company will make such special arrangements available on an individual case basis.

The arrangement required to transfer the service from one operation to the other (i.e., the transfer relay and control leads) will be rated and provided on an individual case basis and filed in Section 12., Specialized Service or Arrangements. The customer will pay the stated tariff rates for the Access Service rate elements for the service ordered (i.e., Channel Terminations, Channel Mileage (as applicable) and Optional Features and Functions (if any).

7.1.5 Special Facilities Routing

A customer may request that the facilities used to provide Special Access Service be specially routed. The regulations, rates and charges for Special Facilities Routing (i.e., Avoidance, Diversity and Cable-Only) are set forth in 11. following.

7.1.6 Design Layout Report

At the request of the customer, the Telephone Company will provide to the customer the make-up of the facilities and services provided under this tariff as Special Access Service to aid the customer in designing its overall service. This information will be provided in the form of a Design Layout Report. The Design Layout Report will be provided to the customer at no charge, and will be reissued or updated whenever these facilities are materially changed.

7. Special Access Service (Cont'd)

7.1 General (Cont'd)

7.1.7 Acceptance Testing

At no additional charge, the Telephone Company will, at the customer's request, cooperatively test at the time of installation, the following parameters:

(A) For Voice Grade analog services, acceptance test will include tests for loss, 3-tone slope, DC continuity, operational signaling, C-notched noise, and C-message noise when these parameters are applicable and specified in the order for service. Additionally, for Voice Grade services, a balance (improved loss) test will be made if the customer has ordered the improved loss optional feature.

(B) For other analog services (i.e., Metallic, Telegraph and Video) and for digital services (i.e., Digital Data and High Capacity) service, acceptance tests will include tests for the parameters applicable to the service as specified by the customer in the order for service.

In addition to the above tests, Additional Cooperative Acceptance Testing for Voice Grade service to test other parameters, as described in 13.3.4(B) following, is available at the customer's request. All test results will be made available to the customer upon request.

7.1.8 Ordering Options and Conditions

Special Access Service is ordered under the Access Order provisions set forth in 5. preceding. Also included in that section are other charges which may be associated with ordering Special Access Service (e.g., Service Date Change Charges, Cancellation Charges, etc.).

7. Special Access Service (Cont'd)

7.2 Rate Regulations

This section contains the specific regulations governing the rates and charges that apply for Special Access.

7.2.1 Rate Categories

There are three basic rate categories which apply to Special Access Service:

- Channel Terminations (described in 7.2.1(A) following)
- Channel Mileage (described in 7.2.1(B) following)
- Optional Features and functions (described in 7.2.1(C) following)

(A) Channel Termination

The Channel Termination rate category provides for the communications path to each customer designated premise. Included as part of the Channel Termination is a standard channel interface arrangement which defines the technical characteristics associated with the type of facilities to which the access service is to be connected at the Point of Termination (POT) and the type of signaling capability, if any. The signaling capability itself is provided as an optional feature as set forth in (C) following. One Channel Termination charge applies per customer designated premises at which the channel is terminated. This charge will apply even if the customer designated premises and the serving wire center are co-located in a Telephone Company building.

For DS3 High Capacity Service, the Channel Termination rates are made up of the DS3 Capacity Interface rate and the DS3 Channel Installed rate. The Capacity Interface rate is dependent upon the capacity ordered (i.e., Capacity Interface of 1, 3, 6 or 12) and is applicable at each customer designated premises. The capacity ordered is the maximum number of DS3 services that can be terminated on a given service at the customer designated premises (e.g., a capacity of 3 can terminate 1, 2 or 3 DS3 services). One DS3 channel Installed rate applies per customer designated premises at which the channel is terminated for each DS3 channel that is ordered. These charges will apply even if the customer designated premises and the serving wire center are collocated in a telephone company building.

7. Special Access Service (Cont'd)

7.2 Rate Regulations (Cont'd)

7.2.1 Rate Categories (Cont'd)

(B) Channel Mileage

The Channel Mileage rate category provides for the end office equipment and the transmission facilities between the serving wire centers associated with two customer designated premises, between a serving wire center associated with a customer designated premises and a Telephone Company hub or between two Telephone Company hubs. Channel Mileage rates are made up of the Channel Mileage Facility rate and the Channel Mileage Termination rate.

(1) Channel Mileage Facility

The Channel Mileage Facility rate recovers the cost for the transmission path which extends between the Telephone Company serving wire centers and/or hub(s) and includes primarily outside plant used to provide the facility.

(2) Channel Mileage Termination

The Channel Mileage Termination rate recovers the cost for end office equipment associated with terminating the facility (i.e., basic circuit equipment and terminations at serving wire centers and hubs). Channel Mileage Termination rate will apply at the serving wire center(s) for each customer designated premises and Telephone Company hub where the channel is terminated. If the Channel Mileage is between Telephone company bridging hubs, the Channel Mileage Termination rate will apply per Telephone Company designated hub. When the Channel Mileage Facility is zero (i.e., co-located serving wire centers), neither the Channel Mileage Facility nor the Channel Mileage Termination rate will apply.

7. Special Access Service (Cont'd)

7.2 Rate Regulations (Cont'd)

7.2.1 Rate Categories (Cont'd)

(C) Optional Features and Functions

The Optional Features and Functions rate category provides for optional features and functions which may be added to a Special Access Service to improve its quality or utility to meet specific communications requirements. These are not necessarily identifiable with specific equipment, but rather represent the end result in terms of performance characteristics which may be obtained. These characteristics may be obtained by using various combinations of equipment. Although the equipment necessary to perform a specified function may be installed at various locations along the path of the service, they will be charged for as a single rate element.

Examples of Optional Features and Functions that are available include, but are not limited to, the following:

- Signaling Capability
- Hubbing Functions
- Conditioning
- Transfer Arrangements

A hub is a Telephone Company designated serving wire center at which bridging or multiplexing functions are performed. The bridging functions performed are to connect three or more customer designated premises in a multipoint arrangement. The multiplexing functions are to channelize analog or digital facilities to individual services requiring a lower capacity or bandwidth. EXCHANGE CARRIER ASSOCIATION TARIFF F.C.C. NO. 4 identifies serving wire centers, hub locations and the type of bridging or multiplexing functions available.

Descriptions for each of the available Optional Features and Functions are set forth in 7.5 through 7.10 following.

7. Special Access Service (Cont'd)

7.2 Rate Regulations (Cont'd)

7.2.2 Types of Rates and Charges

There are three types of rates and charges. These are monthly rates, daily rates and nonrecurring charges. The rates and charges are described as follows:

(A) Monthly Rates

Monthly rates are recurring rates that apply each month or fraction thereof that a Special Access Service is provided. For billing purposes, each month is considered to have 30 days.

(B) Daily Rates

Daily rates are recurring rates that apply to each 24-hour period or fraction thereof that a Video Special Access Service is provided for part-time use. For purposes of applying daily rates, the 24-hour period is not limited to a calendar day.

Part-time Video Service provided within a consecutive 30-day period will be charged the daily rate, not to exceed an amount equal to the monthly rate. For each subsequent day or part day, a charge equal to 1/30th of the monthly rate shall apply.

7. Special Access Service (Cont'd)

7.2 Rate Regulations (Cont'd)

7.2.2 Types of Rates and Charges (Cont'd)

(C) Nonrecurring Charges

Nonrecurring charges are one-time charges that apply for specific work activity (i.e., installation or change to an existing service). The types of nonrecurring charges that apply for Special Access Service are: installation of service, installation of optional features and functions, and service rearrangements.

(1) Installation of Service

Nonrecurring charges apply to each service installed. The nonrecurring charges for the installation of service are set forth in each channel type as a nonrecurring charge for the Channel Termination.

(2) Installation of Optional Features and Functions

Nonrecurring charges apply for the installation of some of the optional features and functions available with Special Access Service. The charge applies whether the feature or function is installed coincident with the initial installation of service or at any time subsequent to the installation of the service.

The optional features for which nonrecurring charges apply are:

- Voice Grade Data Capability
- Voice Grade Telephoto Capability

7. Special Access Service (Cont'd)

7.2 Rate Regulations (Cont'd)

7.2.2 Types of Rates and Charges (Cont'd)

(C) Nonrecurring Charges (Cont'd)

(3) Service Rearrangements

Service rearrangements are changes to existing (installed) services which may be administrative only in nature, as set forth following, or that involve actual physical change to the service. Changes to pending orders are set forth in 5.2.2 preceding.

Changes in the physical location of the point of termination or customer designated premises are moves as set forth in 7.2.3 following.

Changes in the type of Service or Channel Termination which result in a change of the minimum period requirement will be treated as a discontinuance of the service and an installation of a new service.

Changes in ownership or transfer of responsibility from one customer to another will be treated as a discontinuance of the service and an installation of a new service.

Administrative changes will be made without charge(s) to the customer. Administrative changes are as follows:

- Change of customer name when the change of name is not the result of a transfer or change of ownership or responsibility,
- Change of customer or customer's end user premises address when the change of address is not a result of a physical relocation of equipment,
- Change in billing data (name, address, or contact name or telephone number),
- Change of agency authorization,
- Change of customer circuit identification,

7. Special Access Service (Cont'd)

7.2 Rate Regulations (Cont'd)

7.2.2 Types of Rates and Charges (Cont'd)

(C) Nonrecurring Charges (Cont'd)

(3) Service Rearrangements (Cont'd)

- Change of billing account number,
- Change of customer test line number,
- Change of customer or customer's end user contact name or telephone number, and
- Change of jurisdiction.

All other service rearrangements will be charged for as follows:

- If the change involves the addition of other customer designated premises to an existing multipoint service, the nonrecurring charge for the channel termination rate element will apply. The charge(s) will apply only for the location(s) that is being added.

- If the change involves the addition of an optional feature or function which has a separate nonrecurring charge, that nonrecurring charge will apply.

- If the change involves changing the type of signaling on a Voice Grade service, a charge equal to the Voice Grade channel termination rate element nonrecurring charge will apply. The charge will apply per service termination affected.

- For all other changes, including the addition of an optional feature or function without a separate nonrecurring charge, a charge equal to a channel termination nonrecurring charge will apply. Only one such charge will apply per service, per change.

7. Special Access Service (Cont'd)

7.2 Rate Regulations (Cont'd)

7.2.3 Moves

A move involves a change in the physical location of one of the following:

- The Point of Termination at the customer's premises
- The customer's premises

The charges for the move are dependent on whether the move is to a new location within the same building or to a different building.

(A) Moves Within the Same Building

When the move is to a new location within the same building, the charge for the move will be an amount equal to one half of the nonrecurring (i.e., installation) charge for the service termination affected. There will be no change in the minimum period requirements.

(B) Moves To a Different Building

Moves to a different building will be treated as a discontinuance and start of service and all associated nonrecurring charges will apply. New minimum period requirements will be established for the new services. The customer will also remain responsible for satisfying all outstanding minimum period charges for the discontinued service.

7.2.4 Minimum Periods

The minimum service period for all Special Access services except part-time Video and Program Audio services and DS3 High Capacity Service is one month. The minimum service period for part-time Video and Program Audio services is one day (i.e., a continuous 24-hour period, not limited to a calendar day). The minimum service period for DS3 High Capacity Service is twelve months.

7. Special Access Service (Cont'd)

7.2 Rate Regulations (Cont'd)

7.2.5 Mileage Measurement

The mileage to be used to determine the monthly rate for the Channel Mileage Facility is calculated on the airline distance between the locations involved, i.e., the serving wire centers associated with two customer designated premises, a serving wire center associated with a customer designated premises and a Telephone Company hub, two Telephone Company hubs or between the serving wire center associated with a customer designated premises and a WATS serving office. The serving wire center associated with a customer designated premises is the serving wire center from which this customer designated premises would normally obtain dial tone.

Mileage charges are shown with each channel type. To determine the rate to be billed, first compute the mileage using the V&H coordinates method, as set forth in the EXCHANGE CARRIER ASSOCIATION TARIFF F.C.C. NO. 4, then multiply the resulting number of miles times the Channel Mileage Facility per mile rate, and add the Channel Mileage Termination rate for each termination. When the calculation results in a fraction of a mile, always round up to the next whole mile before determining the mileage and applying the rates.

When hubs are involved, mileage is computed and rates applied separately for each section of the Channel Mileage, i.e., customer designated premises serving wire center to hub, hub to hub and/or hub to customer designated premises serving wire center. However, when any service is routed through a hub for purposes other than customer specified bridging or multiplexing (e.g., the Telephone Company chooses to do so route for test access purposes), rates will be applied only to the distance calculated between the serving wire centers associated with the customer designated premises.

7. Special Access Service (Cont'd)

7.2 Rate Regulations (Cont'd)

7.2.6 Facility Hubs

A customer has the option of ordering Voice Grade service or High Capacity services (i.e., DS1) to a facility hub for channelizing to individual services requiring lower capacity facilities (e.g., Telegraph, Voice, etc.).

Different locations may be designated as hubs for different facility capacities, e.g., multiplexing from digital to digital may occur at one location while multiplexing from digital to analog may occur at a different location. When placing an Access Order the customer will specify the desired hub. EXCHANGE CARRIER ASSOCIATION TARIFF F.C.C. NO. 4 identifies serving wire centers, hub locations and the type of multiplexing functions available.

For Digital Data and High Capacity Services, the end offices providing digital capabilities and the types of bridging and/or multiplexing functions available can be found in the local Windstream Nebraska, Inc., Digital Services Catalog.

Some of the types of multiplexing available include the following:

- from higher to lower bit rate
- from higher to lower bandwidth
- from digital to voice frequency channels

Point to point services may be provided on channels of these services to a hub. The transmission performance for the point to point service provided between customer designated premises will be that of the lower capacity or bit rate. For example, when a 1.544 Mbps channel is multiplexed to voice frequency channels, the transmission performance of the channelized services will be Voice Grade, not High Capacity.

7. Special Access Service (Cont'd)

7.2 Rate Regulations (Cont'd)

7.2.6 Facility Hubs (Cont'd)

The Telephone Company will commence billing the monthly rate for the service to the hub on the date specified by the customer on the Access Order. Individual channels utilizing these services may be installed coincident with the installation of the service to the hub or may be ordered and/or installed at a later date, at the option of the customer. The customer will be billed for a Voice Grade or a High Capacity Channel Termination, Channel Mileage (when applicable), and the multiplexer at the time the service is installed. Individual service rates (by service type) will apply for a Channel Termination and additional Channel Mileage (as required) for each channelized service. These will be billed to the customer as each individual service is installed.

Cascading multiplexing occurs when a High Capacity service is de-multiplexed to provide channels with a lesser capacity. For example, a DS1 channel is de-multiplexed to 24 individual DS0-B channels and then one of the DS0-B channels is further de-multiplexed into five 9.6, or ten 4.8 or twenty 2.4 Kbps DS0-A channels.

When cascading multiplexing is performed, whether in the same or a different hub, a charge for the additional multiplexing unit also applies. When cascading multiplexing is performed at different hubbing locations, Channel Mileage charges also apply between the hubs.

The Telephone Company will designate hubs for Video Services. Full-time or part-time service may be provided between customer designated premises or between a customer designated premises and a hub and billed accordingly at the monthly rates set forth in 7.8 following for a Channel Termination, Channel Mileage and Optional Features and Functions, as applicable. When the service is ordered to a hub, the customer may order a full-time or part-time Video services as needed between that hub and additional customer designated

7. Special Access Service (Cont'd)

7.2 Rate Regulations (Cont'd)

7.2.6 Facility Hubs (Cont'd)

premises. The rate elements required to provide the part-time service (i.e., Channel Termination, Channel Mileage and Optional Features and Functions, as applicable) will be billed at daily rates for the duration of the service requested.

7.2.7 Shared Use Analog and Digital High Capacity Services

Shared use refers to a rate application applicable only when the customer orders High Capacity Special Access facilities between a customer designated premises and a Telephone Company hub where the Telephone Company performs multiplexing/demultiplexing functions and the same customer then orders the derived channels as Special and Switched Access Services. If the customer has Switched Access Service between a customer designated premises and an end office that is multiplexed at a Telephone Company hub and subsequently orders the derived channels as Special and Switched Access Service, rates and charges will apply as if the service were ordered as shared use.

Except as noted above, the High Capacity facility will be ordered, provided and rated as Special Access Service (i.e., Channel Termination, Channel Mileage, as appropriate, and Multiplexing Arrangement). The nonrecurring charge that applies when the shared use facility is installed will be the nonrecurring charge associated with the appropriate Special Access High Capacity Channel Termination. Rating as Special Access will continue until such time as the customer chooses to use a portion of the available capacity for Switched Access Service. Individual service (i.e., Switched or Special Access) nonrecurring charges will not apply to the individual channels of the shared use facility.

When Special Access Service is provided utilizing a channel of the shared use facility to a hub, High Capacity rates and charges will apply for the facility to the hub, as set forth preceding, and individual service rates and charges will apply from the hub to the customer designated premises. The rates and charges that will apply to the portion from the hub to the customer designated premises will be dependent on the specific type of Special Access Service that is provided (e.g., Voice Grade, Telegraph, etc.). The applicable rates and charges will include a Channel Termination and Channel Mileage, if applicable. Rates and charges for optional features and functions associated with the service, if any, will apply for the appropriate channel type.

7. Special Access Service (Cont'd)

7.2 Rate Regulations (Cont'd)

7.2.7 Shared Use Analog and Digital High Capacity Services (Cont'd)

As each individual channel is activated for Switched Access Service, the High Capacity Special Access Channel Termination, Channel Mileage, and Multiplexing rates will be reduced accordingly (e.g., 1/24th for a DS1 service, 1/672nd for a per DS3 or DS3 capacity of 1, 1/2016th for a DS3 capacity of three, etc.).

Switched Access Service rates and charges, as set forth in 6.8 preceding, will apply for each channel that is used to provide a Switched Access Service. Additionally, the Switched Access Service Entrance Facility, Direct-Trunked Transport, and Multiplexing charges, if applicable, will be reduced by multiplying their respective rates by the ratio of derived Switched Access Service channels to the total number of Voice Grade channels that can be derived.

The customer must place an order for each individual Switched or Special Access Service utilizing the Shared Use Facilities and specify the channel assignment for each such service.

7. Special Access Service (Cont'd)

7.2 Rate Regulations (Cont'd)

7.2.8 High Capacity Optional Rate Plans

There are two High Capacity Optional Rate plans; a Term Discount plan and a Capacity Discount plan.

The Term Discount plan applies to Special Access DS3 High Capacity Service Channel Termination, Channel Mileage Facility and Channel Mileage Termination monthly rates, as set forth following. The amount of the discount differs based on the length of the service commitment period selected by the customer.

Discounts for the Term Discount plan are only applied to High Capacity Service provided a customer within the same state and LATA by the same telephone company.

Discounts for the Capacity Discount plan are only applied to Special Access DS3 High Capacity Service Channel Termination monthly rates as set forth in 7.10.6 following.

The minimum service period on a monthly rate basis is one month for DS1 service and twelve months for DS3 service.

7. Special Access Service (Cont'd)

7.2 Rate Regulations (Cont'd)

7.2.8 High Capacity Optional Rate Plans (Cont'd)

(A) Term Discounts

DS3 High Capacity Special Access Service may be ordered at the customer's option on a monthly rate basis or for Term Discount periods of 36 months (3 years) or 60 months (5 years).

The minimum service period for all Term Discount plans is twelve months. The customer must specify the length of the service commitment period at the time the service is ordered.

For customers that subscribe to the Term Discount plan for 36 or 60 months, the Term Discount Rates as set forth in 7.10.6 following will be frozen from Company initiated increases, for the entire discount period at the rates in effect at the beginning of the term Discount period.

If a Term Discount rate decrease occurs during the term of an existing Term Discount plan, the decreased rate will be applied automatically to the remainder of the current Term Discount period.

At the end of the Term Discount period, the customer may convert to month-to-month service or subscribe to a new Term Discount Plan. If the customer does not make a choice by the end of the discount period, the rates will automatically convert to month-to-month service rates.

7. Special Access Service (Cont'd)

7.2 Rate Regulations (Cont'd)

7.2.8 High Capacity Optional Rate Plans (Cont'd)

(A) Term Discounts (Cont'd)

To be included in a Service Term Discount plan, all eligible High Capacity rate elements must be ordered for the same commitment term (i.e., all 36 months or all 60 months) and with the same service date. When additional capacity is subsequently added, it will be available only on a month-to-month basis unless the discount period of the entire service is upgraded.

Eligible DS3 High Capacity rate elements are those Channel Terminations, Channel Mileage Facility and Channel Mileage Terminations provided to a customer within the same state and LATA by the same telephone company.

7. Special Access Service (Cont'd)

7.2 Rate Regulations (Cont'd)

7.2.8 High Capacity Optional Rate Plans (Cont'd)

(A) Term Discounts (Cont'd)

(1) Upgrades in Term Discounts

Services provided under monthly rates or Term Discount rates may be upgraded to a Term Discount plan at any time without incurring Channel Termination nonrecurring charges or discontinuance charges for existing services. The new Term Discount plan must meet or exceed the service term of the plan being upgraded. For example, a service with a 36-month commitment period may be upgraded to a new 36-month or 60-month service period. The monthly rates will be those that are in effect at the time the service is upgraded. A new minimum service period applies to all High Capacity Service that is upgraded.

7. Special Access Service (Cont'd)

7.2 Rate Regulations (Cont'd)

7.2.8 High Capacity Optional Rate Plans (Cont'd)

(A) Term Discounts (Cont'd)

(2) Upgrades in Capacity (DS1 to DS3)

A new minimum service period applies to all upgrades. Channel Termination nonrecurring charges for an equivalent channel capacity of the existing services being upgraded to the higher speed service will not be assessed. For example, 30 DS1 Services are being upgraded to DS3 Service. A capacity of 3 is installed at the customer's request. A total of 2 DS3 Channel rate elements will be installed without Channel Termination nonrecurring charges being assessed as it will require 2 DS3 Channel rate elements to provide the equivalent channel capacity of the existing services. Channel Termination nonrecurring charges will not apply to the upgraded lower speed services placed on the higher speed service if requested at the same time as the upgrade request. Channel Termination nonrecurring charges will apply for capacity that exceeds the existing equivalent channel capacity.

7. Special Access Service (Cont'd)

7.2 Rate Regulations (Cont'd)

7.2.8 High Capacity Optional Rate Plans (Cont'd)

(A) Term Discounts (Cont'd)

(3) Discontinuance of Service

If the customer chooses to disconnect all or a portion of the service prior to the expiration of the Term Discount period, discontinuance charges will apply to the portion of the service being discontinued.

Should the customer choose to discontinue a Term Discount plan prior to the completion of the minimum service period, discontinuance charges will apply. Discontinuance charges equal to one-hundred percent of the total undiscounted monthly rates, less any amounts previously paid, will apply for the minimum service period.

Additionally, discontinuance charges of fifty percent of the total undiscounted monthly DS3 charges will apply to the remaining portion of the discount service term.

Should the customer choose to discontinue service ordered under a Term Discount plan after the minimum service period but before the completion of the discount period, discontinuance charges will apply. Discontinuance charges of fifty percent for DS3 Service, of the total undiscounted monthly charges will apply to the remaining portion of the discount period. For example, a customer has a DS3 Service which it chooses to discontinue after 33 months into a 60-month service term. The discontinuance charge would be 0.50 times 27 months times the undiscounted monthly rate for that service.

7. Special Access Service (Cont'd)

7.2 Rate Regulations (Cont'd)

7.2.8 High Capacity Optional Rate Plans (Cont'd)

(B) DS3 Capacity Discounts

DS3 High Capacity Service may also be ordered at discounted rates in capacities of 3, 6 and 12 systems under a Capacity Discount Plan. Capacity Discounts apply only to DS3 Channel Terminations (i.e., DS3 Capacity Interfaces and DS3 Channels Installed). DS3 Capacity Discounts may be ordered as part of, or separate from Term Discount plans. When ordered in conjunction with Term Discount plans, the DS3 Channel Terminations must all be ordered under the same month-to-month rate or Term Discount plan with the same service period and service date.

For DS3 High Capacity Channel Terminations the Capacity Interface must be ordered before or in conjunction with an associated DS3 Channel Installed. In addition, the Capacity Interface can not be disconnected until all of the DS3 Channels Installed are disconnected.

High Capacity Channel Mileage Facility and Channel Mileage Termination charges will apply as required Per DS3 Channel Installed. Capacity Discounts will not apply to these rate elements.

Capacity Discounts will only apply on DS3 Channel Terminations ordered between a serving wire center and customer location, over the same route. Channel Terminations associated with facilities provided between the same serving wire center and customer location via a second or alternate route will not be included as part of the same Capacity Discount plan as the primary route.

The minimum service period for all Capacity Discount plans is twelve months.

7. Special Access Service (Cont'd)

7.2 Rate Regulations (Cont'd)

7.2.8 High Capacity Optional Rate Plans (Cont'd)

(B) DS3 Capacity Discounts (Cont'd)

(1) Upgrades in DS3 Capacity Discounts

Services rated under the DS3 monthly rate plan may be upgraded to a Capacity Discount Plan at any time, without incurring Channel Termination nonrecurring or discontinuance charges for existing services.

Customers with a capacity of 1, 3 or 6 DS3 High Capacity Special Access Systems may upgrade to a new Capacity Discount without incurring Channel Termination nonrecurring or discontinuance charges for existing capacity. This upgrade will be allowed provided the customer designated premises remain the same. Additionally, the new Channel Termination capacity must exceed the Channel Termination capacity of the plan being upgraded. For example, a customer orders a Capacity of 3 DS3 Interface with 2 DS3 Channels Installed. Subsequently, the customer requests an upgrade to a Capacity of 12 DS3 Interface and adds an additional 3 DS3 Channels installed. The monthly rates will be those that are in effect at the time the service is upgraded. A new minimum service period applies to all services that are upgraded. Full Channel Termination nonrecurring charges as set forth in Section 7.11.6 will apply only to the 3 additional DS3 Channels added at the time of the discount plan upgrade.

7. Special Access Service (Cont'd)

7.2 Rate Regulations (Cont'd)

7.2.8 High Capacity Optional Rate Plans (Cont'd)

(B) DS3 Capacity Discounts (Cont'd)

(1) Upgrades in DS3 Capacity Discounts (Cont'd)

Customers that subscribe to DS3 Capacity Discount plan may upgrade to a larger Capacity Interface. Discontinuance charges will not apply if all the following conditions are met:

- the customer's order for the disconnect of the current DS3 Capacity Interface and order for the installation of the upgraded DS3 Capacity Interface are received by the telephone company at the same time and specifies that the capacity of service is to be upgraded,

- the customer's disconnect order for the existing DS3 Service must reference the new connection order,

- the new service is provided between the same customer locations as the discontinued service,

- the new service has a DS3 Capacity Interface larger than the Capacity Interface of the discount plan or plans being discontinued and,

- any applicable DS3 High Capacity Term Discount plan time period is reestablished or upgraded at the time of the upgrade in the Capacity Discount plan.

7. Special Access Service (Cont'd)

7.3 Surcharge for Special Access Service

7.3.1 General

(A) Special access services provided under this tariff may be subject to the monthly Special Access Surcharge.

7.3.2 Application

(A) The Special Access Surcharge will apply to each intrastate Special Access Service that terminates on an end user's PBX or other device where, through a function of the device, the Special Access Service interconnects to the local exchange network. Interconnection functions include, but are not limited to, wiring and software functions, bridging, switching or patching of calls or stations. the Surcharge will apply irrespective of whether the interconnection function is performed in equipment located at the customer's premises or in a Centrex Co-type switch.

7. Special Access Service (Cont'd)

7.3 Surcharge for Special Access Service (Cont'd)

7.3.2 Application (Cont'd)

(B) Special Access Service will be exempted from the Surcharge by the Telephone Company upon receipt of the customer's written certification for the following Special Access Service terminations:

(1) an open-end termination in a Telephone Company switch of an FX line, including CCSA and CCSA-equivalent ONALs; or

(2) an analog channel termination that is used for radio or television program transmission; or

(3) a termination used for TELEX service; or

(4) a termination that by the nature of its operating characteristics could not make use of Telephone Company common lines such as, terminations which are restricted through hardware or software; or

(5) a termination that interconnects either directly or indirectly to the local exchange network where the usage is subject to Carrier Common Line charges such as, where the Special Access Service accesses only FGA and no local exchange lines, or Special Access Service between customer points of termination, or Special Access Service connecting CCSA or CCSA-type equipment (inter-machine trunks); or

(6) a termination that the customer certifies to the Telephone Company is not connected to a PBX or other device which interconnects the Special Access Service to a local exchange subscriber line.

7. Special Access Service (Cont'd)

7.3 Surcharge for Special Access Service (Cont'd)

7.3.3 Exemption of Special Access Service

(A) Special Access Services which are terminated as set forth in 7.3.2(B) preceding will be exempted from the Special Access Surcharge if the customer provides the Telephone Company with written exemption certification. The certification may be provided to the Telephone Company (1) at the time the Special Access Service is ordered or installed; (2) at such time as the service is reterminated to a device which does not interconnect to local exchange facilities, or (3) at such time as the service becomes associated with a Switched Access Service that is subject to Carrier Common Line Charges.

(B) The exemption certification is to be provided by the customer ordering the service. The certification must be signed by the customer or authorized representative and include the category of exemption, as set forth in 7.3.2(B) preceding, for each termination, and the date when the exemption is effective.

(C) The customer shall also notify the Telephone Company when an exempted Special Access Service is changed or reterminated such that the exemption is no longer applicable.

(D) The Telephone Company will work cooperatively with the customer to resolve any questions regarding the exemption certification. In addition, the Telephone Company may withhold exemption of the service until the dispute is resolved.

7. Special Access Service (Cont'd)

7.3 Surcharge for Special Access Service (Cont'd)

7.3.4 Rate Regulations

(A) The Surcharge will apply as set forth in 7.3.2(A) preceding, except that a surcharge will be assessed on a per voice grade equivalent basis for Special Access Services derived from High Capacity Special Access Services as shown in the following example:

Special Access Service	Voice Grade Equivalent		Surcharge		Monthly Charge
DS1	24	x	$25	=	$600.00

In the case of multipoint Special Access Services, one Special Access Surcharge will apply for each termination of a Special Access Channel at an end user's premises.

(B) The Telephone Company will bill the appropriate Special Access Surcharge to the ordering customer for each intrastate Special Access Service installed unless exemption certification is provided as set forth in 7.3.3 preceding.

(C) If a written certification is not received at the time the Special Access Service is obtained, the Surcharge will be applied. Exempt status will become effective on the certification date indicated by the customer, subject to the regulations set forth in (D) following.

7. Special Access Service (Cont'd)

7.3 Surcharge for Special Access Service (Cont'd)

7.3.4 Rate Regulations (Cont'd)

(D) Crediting the Surcharge

The Telephone Company will cease billing the Special Access Surcharge when certification, as set forth in 7.3.3 preceding, is received. If the status of the Special Access Service was changed prior to receipt of the exemption certification, the Telephone Company will credit the customer's account, not to exceed ninety (90) days, based on the effective date of the change as specified by the customer in the letter of certification.

(E) Surcharge Payment Deferral Provision

The Telephone Company will bill the surcharge on Special Access facilities in service as of June 1, 1986, used in the provision of WATS or WATS-type service through a Telephone Company designated WATS Serving Office (WSO). Payment of such surcharge may be deferred, without penalty, for up to ninety (90) days from the date of the first bill rendered for the Special Access Surcharge.

If appropriate exemption certification is not received by the Telephone Company by the end of the ninety (90) days deferral period, the billed Special Access Surcharge will become due. These charges, if unpaid, will be subject to a late payment charge as set forth in Section 2.4.1(B)(2) preceding.

7.3.5 Rate

	USOC	Monthly Rate
Surcharge for Special Access Service -Per Voice Grade Equivalent	S25	$25.00

7. Special Access Service (Cont'd)

7.4 Message Station Equipment Recovery Charge

7.4.1 General

(A) The Message Station Equipment Recovery Charge is a charge to recover that portion of message station equipment that is assigned to Special Access Service.

Pursuant to CC Docket 83-1145 Memorandum Opinion and Order adopted by the Federal Communications Commission on November 8, 1984, and released on November 9, 1984, this charge is assessed only to those customers to which the Special Access Surcharge, as set forth in 7.3 preceding, applies.

7.4.2 Rate

	USOC	Monthly Rate
Message Station Equipment Recovery Charge -Per Special Access Surcharge Assessed	UTM	$ 3.80

7. Special Access Service (Cont'd)

7.5 Metallic Service

7.5.1 Basic Channel Description

A Metallic channel is an unconditioned two-wire channel arranged to transmit direct current and capable of transmitting low speed varying signals at rates up to 30 baud. This channel is provided by metallic or equivalent facilities. Metallic channels are provided between customer designated premises or between a customer designated premises and a Telephone Company hub where bridging functions are performed. Interoffice metallic facilities will be limited in length to a total of five miles per channel.

It is expressly declared that metallic facilities are in continually decreasing supply and the Company is not obligated to continue to provide such facilities. Due to facility rearrangements, continued use of metallic facilities may be denied to existing customers with no obligation on the Company's part to pay customer equipment rearrangement costs. The Company will give the customer 90 days notification of this type of facility rearrangements. Metallic facilities are provided only where existing facilities and operating conditions permit.

7.5.2 Technical Specifications Packages

	Package MT-			
Parameter	C*	1	2	3
DC Resistance Between Conductors	X	X	X	
Loop Resistance	X			X
Shunt Capacitance	X			X

The technical specifications are delineated in Technical Reference TR-NPL-000336.

* All parameters are available within the ranges selected by the customer where technically feasible.

7. Special Access Service (Cont'd)

7.5 Metallic Service (Cont'd)

7.5.3 Channel Interfaces

Compatible channel interfaces are set forth in 15.3 following.

7.5.4 Optional Features and Functions

(A) Central Office Bridging Capability

(1) Three Premises Bridging - Provision of tip-to-tip and ring-to-ring connection in a central office of a metallic pair to a third customer designated premises.

(2) Series Bridging of up to 26 customer designated premises.

The following table shows the technical specifications packages with which the optional features and functions are available.

	Available with Technical Specifications Package MT-			
	C	1	2	3
Three Premises Bridging	X	X		X
Series Bridging	X	X		

7. Special Access Service (Cont'd)

7.5 Metallic Service (Cont'd)

7.5.5 Rates and Charges

	USOC	Monthly Rate	Nonrecurring Charge
(A) Channel Termination - Per Termination	T6ECS	$7.87	$214.05

	USOC	Monthly Rate
(B) Channel Mileage		
(1) Channel Mileage Facility - Per Mile	CMF	$17.86
(2) Channel Mileage Termination - Per Termination	CMT	None
(C) Optional Features and Functions		
(1) Bridging		
(a) Three Premises Bridging - Per Port	BCNM3	$1.18
(b) Series Bridging - Per Port	BCNMS	$1.18

7. Special Access Service (Cont'd)

7.6 Telegraph Grade Service

7.6.1 Basic Channel Description

A Telegraph Grade channel is an unconditioned channel capable of transmitting binary signals at rates of 0-75 baud or 0-150 baud. This channel is furnished for half-duplex or duplex operation. Telegraph Grade channels are provided between customer designated premises or between a customer designated premises and a Telephone Company hub.

7.6.2 Technical Specifications Packages

Parameter	Package TG- C*	1	2
Telegraph Distortion	X	X	X

The technical specifications are delineated in Technical Reference TR-NPL-000336.

7.6.3 Channel Interfaces

Compatible channel interfaces are set forth in 15.3 following.

7.6.4 Optional Features and Functions

(A) Telegraph Bridging (two-wire and four-wire)

The following table shows the technical specifications packages with which the optional features and functions are available.

	Available with Technical Specifications Package TG- C*	1	2
Telegraph Bridging	X	X	X

* All parameters are available within ranges selected by the customer where technically feasible.

7. Special Access Service (Cont'd)

7.6 Telegraph Grade Service (Cont'd)

7.6.5 Rates and Charges

	USOC	Monthly Rate	Nonrecurring Charge
(A) Channel Termination			
- Per Termination			
-Two-Wire	T6E2X	$20.92	$214.05
-Four-Wire	T6E4X	$33.47	$214.05

	USOC	Monthly Rate
(B) Channel Mileage		
(1) Channel Mileage Facility - Per Mile	CMF	$ 1.32
(2) Channel Mileage Termination - Per Termination	CMT	$11.00
(C) Optional Features and Functions		
(1) Telegraph Bridging Two-Wire and Four-Wire - Per Port		
- Two-Wire	BCNT2	$ 1.18
- Four-Wire	BCNT4	$ 1.18

7. Special Access Service (Cont'd)

7.7 Voice Grade Service

7.7.1 Basic Channel Description

A Voice Grade channel is a channel which provides voice frequency transmission capability in the nominal frequency range of 300 to 3000 Hz and may be terminated two-wire or four-wire. Voice Grade channels are provided between customer designated premises, between a customer designated premises and a Telephone Company hub or between a customer designated premises and a WATS Serving Office (WSO).

7.7.2 Technical Specifications Packages

	Package VG-													
Parameter	C*	1	2	3	4	5	6	7	8	9	10	11	12	W
Attentuation Distortion	X	X	X	X	X	X	X	X	X	X	X	X	X	X
C-Message Noise	X	X	X	X	X	X	X	X	X	X	X	X	X	
Echo Control	X	X	X	X		X		X	X			X	X	X
Envelope Delay Distortion	X						X	X	X	X	X	X	X	X
Frequency Shift	X						X	X	X	X	X	X	X	X
Impulse Noise	X					X	X	X	X	X	X	X	X	X
Intermodulation Distortion	X						X	X	X	X	X	X		X
Loss Deviation	X	X	X	X	X	X	X	X	X	X	X	X	X	X
Phase Hits, Gain Hits, and Dropouts	X													
Phase Jitter	X						X	X	X	X	X	X		X
Signal-to-C Message Noise					X									
Signal-to-C Notch Noise	X					X	X	X	X	X	X	X	X	X

* The desired parameters are selected by the customer from the list of available parameters.

7. Special Access Service (Cont'd)

7.7 Voice Grade Service (Cont'd)

7.7.2 Technical Specifications Packages (Cont'd)

The technical specifications for these parameters (except for dropouts, gain hits, and phase hits) are delineated in Technical Reference TR-NPL-000335 and associated Addendum. The technical specifications for dropouts, phase hits, and gain hits are delineated in Technical Reference PUB 41004, Table 4.

7.7.3 Channel Interfaces

The following channel interfaces for Voice Grade service do not require signaling capability: AH, DA, DB, DD, DE, DS, NO, PR and TF.

The following channel interfaces for Voice Grade service require signaling capability: AB, AC, CT, DX, DY, EA, EB, EC, EX, GO, GS, LA, LB, LC, LO, LR, LS, RV and SF.

Compatible channel interfaces are set forth in 15.3 following.

7.7.4 Optional Features and Functions

(A) Central Office Bridging Capability

(1) Voice Bridging (two-wire and four-wire)

(2) Data Bridging (two-wire and four-wire)

(3) Telephoto Bridging (two-wire and four-wire)

(4) DATAPHONE Select-A-Station Bridging with sequential arrangement ports or addressable arrangement ports

7. Special Access Service (Cont'd)

7.7 Voice Grade Service (Cont'd)

7.7.4 Optional Features and Functions (Cont'd)

(A) Central Office Bridging Capability (Cont'd)

(5) Telemetry and Alarm Bridging

Split Band, Active Bridging
Passive Bridging
Summation, Active Bridging

(B) Central Office Multiplexing

Voice to Telegraph Grade. An arrangement that converts a Voice Grade channel to Telegraph Grade channels using frequency division multiplexing.

(C) Conditioning

Conditioning provides more specific transmission characteristics for Voice Grade services. C-Type conditioning controls attenuation distortion and envelope delay distortion. Sealing Current helps maintain continuity on dry metallic loops.

For two-point services, the parameters apply to each service. For multipoint services, the parameters apply to each mid-link or end link. C-Type conditioning and Data Capability may be combined on the same service.

7. Special Access Service (Cont'd)

7.7 Voice Grade Service (Cont'd)

7.7.4 Optional Features and Functions (Cont'd)

(C) Conditioning (Cont'd)

(1) C-Type Conditioning

C-Type Conditioning is provided for the additional control of attentuation distortion and envelope delay distortion on data services. The attentuation distortion and envelope delay distortion specifications for C-Type Conditioning are:

Attenuation Distortion (Frequency Response) Relative to 1004 Hz		Envelope Delay Distortion	
Frequency Range (Hz)	Variation (dB)	Frequency Range (Hz)	Variation (micro-seconds)
	1000-2600	.100	
.400-2800	-1.0 to +2.0	800-2600	.200
.300-3000	-1.0 to +3.0	600-2600	.300
.3000-3200	-2.0 to +6.0	500-2800	.600
	500-3000	3000	

7. Special Access Service (Cont'd)

7.7 Voice Grade Service (Cont'd)

7.7.4 Optional Features and Functions (Cont'd)

(C) Conditioning (Cont'd)

(2) Sealing Current Conditioning

Sealing Current Conditioning is provided to help maintain continuity on dry metallic loops. It is usually associated with four-wire DA or NO type channel interfaces.

(D) Customer Specified Premises Receive Level

This option allows the customer to specify the receive level at the Point of Termination. The level must be within a specific range on effective four-wire transmission. The ranges are delineated in Technical Reference TR-NPL-000335.

(E) Improved Return Loss

(1) On Effective Four-Wire Transmission at Four-Wire Point of Termination (applicable to each two-wire port): Provides for a fixed 600 ohm impedance, variable level range and simplex reversal. Telephone Company equipment is required at the customer's premises where this option is ordered. The Improved Return Loss parameters are delineated in Technical Reference TR-NPL-000335.

(2) On Effective Two-Wire Transmission at Two-Wire Point of Termination: Provides for more stringent Echo Control specifications. In order for this option to be applicable, the transmission path must be four-wire at one POT and two-wire at the other POT. Placement of Telephone Company equipment may be required at the customer's premises with the two-wire POT. The Improved Return Loss parameters are delineated in Technical Reference PUB 62501.

7. Special Access Service (Cont'd)

7.7 Voice Grade Service (Cont'd)

7.7.4 Optional Features and Functions (Cont'd)

(F) Data Capability (D Conditioning)

Data Capability provides a transmission characteristics suitable for data communications. Specifically, Data Capability provides for the control of Signal to C-Notched Noise Ratio and intermodulation distortion. It is available for two-point services or three-point multipoint services.

The Signal to C-Notched Noise Ratio and intermodulation distortion parameter for Data Capability are:

- Signal to C-Notched Noise Ratio is equal to or greater than 32dB.
- Intermodulation distortion:
- Signal to second order modulation products (R2) is equal to or greater than 38dB.
- Signal to third order modulation products (R3) is equal to or greater than 42 dB.

When a service equipped with Data Capability is used for voice communications, the quality of the voice transmission may not be satisfactory.

(G) Telephoto Capability

Telephoto Capability provides a transmission characteristic suitable for telephotographic communications. Specifically, Telephoto Capability is provided for the control of attenuation distortion and envelope delay distortion on telephotographic services. The attenuation distortion and envelope delay distortion parameters for Telephoto Capability are:

7. Special Access Service (Cont'd)

7.7 Voice Grade Service (Cont'd)

7.7.4 Optional Features and Functions (Cont'd)

(G) Telephoto Capability (Cont'd)

(1004Hz Reference)

Attenuation Distortion		Envelope Delay Distortion	
Frequency Range (Hz)	Variation (dB)	Frequency Range (Hz)	Variation (mcs)
500-3000	-0.5 to +1.5	1000-2600	110
300-3200	-1.0 to +2.5	800-2800	180

(H) Signaling Capability

Signaling Capability provides for the ability to transmit signals from one customer premises to another customer premises on the same service.

(I) Selective Signaling Arrangement

An arrangement that permits code selective ringing for up to ten codes on a multipoint service.

(J) Transfer Arrangement

An arrangement that affords the customer an additional measure of flexibility in the use of their access channel(s). The arrangement can be utilized to transfer a leg of a Special Access Service to another channel that terminates in either the same or a different customer premises. A key activated or dial-up control service is required to operate the transfer arrangement. A spare channel, if required, is not included as part of the option.

7. Special Access Service (Cont'd)

7.7 Voice Grade Service (Cont'd)

7.7.4 Optional Features and Functions (Cont'd)

(K) Four-Wire/Two-Wire Conversions

When a customer requests that an effective four-wire channel be terminated with a two-wire channel interface at the customer designated premises, a four-wire to two-wire conversion is required. The rate for the conversion is included as part of the basic Channel Termination rate.

(L) Improved Two-Wire Voice Transmission

(1) Loss Deviation

The maximum Loss Deviation of the 1004 Hz loss relative to the Expected measured Loss (EML) is -4.0 dB to +4.0 dB.

(2) Attenuation Distortion

The maximum Attenuation Distortion in the 404 to 280 Hz frequency band relative to loss at 1004 Hz is -2.0 dB to +6.0 dB.

7. Special Access Service (Cont'd)

7.7 Voice Grade Service (Cont'd)

7.7.4 Optional Features and Functions (Cont'd)

(L) Improved Two-Wire Voice Transmission (Cont'd)

(3) C-Message Noise

The maximum C-Message Noise for the transmission path at the route miles listed is less than:

Route Miles	C-Message Noise
less than 50	35 dBrnco
51 to 100	37 dBrnco
101 to 200	40 dBrnco
201 to 400	43 dBrnco
401 to 1000	45 dBrnco

(4) Return Loss

The Return Loss, expressed as Echo Return Loss (ERL) and Singing Return Loss (SRL), is equal to or greater than:

ERL	13.0 dB
SRL	6.0 dB

The rate for the provision of Improved Two-Wire Voice Transmission is included as part of the basic Channel Termination rate.

The following table shows the technical specifications packages with which the optional features and functions are available.

7. Special Access Service (Cont'd)

7.7 Voice Grade Service (Cont'd)

7.7.4 Optional Features and Functions (Cont'd)

	Available with Technical Specifications Package VG-													
	C	1	2	3	4	5	6	7	8	9	10	11	12	W
C-Type Conditioning	X					X	X	X	X	X	X			
Central Office Bridging Capability	X		X			X	X				X	X	X	X
Central Office Multiplexing	X						X							
Customer Specified Premises Receive Level	X		X	X				X	X	X				
Data Capability	X						X	X			X			
Improved Return Loss For Effective Four-Wire Transmission	X	X	X	X	X	X	X	X	X	X	X	X	X	X
For Effective Two-Wire Transmission	X		X	X				X						
Improved Two-Wire Voice Tranmission														X
Sealing Current Conditioning	X						X							
Selective Signaling Arrangement	X		X			X	X				X	X	X	
Signaling Capability	X	X	X	X				X	X	X				X
Telephoto Capability	X											X		
Transfer Arrangement	X	X	X	X	X	X	X	X	X	X	X	X	X	X

7. Special Access Service (Cont'd)

7.7 Voice Grade Service (Cont'd)

7.7.5 Rates and Charges

	USOC	Monthly Rate	Nonrecurring Charge
(A) Channel Termination			
- Per Termination			
-Two-Wire	T6E2X	$18.70	$214.05
-Four-Wire	T6E4X	$29.97	$214.05

	USOC	Monthly Rate
(B) Channel Mileage		
(1) Channel Mileage Facility - Per Mile	CMF	$ 1.31
(2) Channel Mileage Termination - Per Termination	CMT	$15.00
(C) Optional Features and Functions		
(1) Bridging		
(a) Voice Bridging		
Two-Wire/Four-Wire - Per Port		
- Two-Wire	BCNV2	$ 1.30
- Four-Wire	BCNV4	$ 1.30

ACCESS SERVICE

7. Special Access Service (Cont'd)

7.7 Voice Grade Service (Cont'd)

7.7.5 Rates and Charges (Cont'd)

	USOC	Monthly Rate
(C) Optional Features and Functions (Cont'd)		
(1) Bridging (Cont'd)		
(b) Data Bridging		
Two-Wire/Four-Wire		
- Per port		
- Two-Wire	BCND2	$ 1.30
- Four-Wire	BCND4	$ 1.30
(c) Telephoto Bridging		
Two-Wire/Four-Wire		
- Per port		
- Two-Wire	BCNF2	$ 1.30
- Four-Wire	BCNF4	$ 1.30
(d) DATAPHONE Select-A-Station Bridging		
Sequential Arrangement Ports		
- Per channel Connected		
- Two-Wire	DQ2	$ 22.41
- Four-wire	DQ4	$119.00
Addressable Arrangement Ports		
- Per Channel Connected		
- Two-Wire	KQ2	$ 24.03
- Four-wire	KQ4	122.33

7. Special Access Service (Cont'd)

7.7 Voice Grade Service (Cont'd)

7.7.5 Rates and Charges (Cont'd)

	USOC	Monthly Rate
(C) Optional Features and Functions (Cont'd)		
(1) Bridging (Cont'd)		
(e) Telemetry and Alarm Bridging		
Active Bridging Channel Connections		
- Split Band		
- Per channel connected	CNLRX	$ 8.49
- Summation		
- Per channel connected	BCNSA	$ 1.45
Passive Bridging Channel Connections		
- Per channel connected	BCNTP	$ .21
(2) Conditioning		
- Per Termination		
- C - Type	X1CPT	$ 2.50
- Sealing Current	1HBPT	None

ACCESS SERVICE

7. Special Access Service (Cont'd)

7.7 Voice Grade Service (Cont'd)

7.7.5 Rates and Charges (Cont'd)

	USOC	Monthly Rate	Nonrecurring Charge
(C) Optional Features and Functions (Cont'd)			
(3) Improved Return Loss for Effective Two-Wire or Four-Wire Transmission - Per termination			
- Two-Wire	1RL2W	$ 3.67	None
- Four-Wire	1RL4W	$ 3.67	None
(4) Customer Specified Receive Level - Per two-wire termination	RLS	None	None
(5) Multiplexing			
Voice to Telegraph Grade - Per arrangement	MQX	$228.82	None
(6) Data Capability - Per termination	XDCPT	$ 8.91	$119.69
(7) Telephoto Capability - Per termination	XTCPT	$ 2.97	$247.03

ACCESS SERVICE

7. Special Access Service (Cont'd)

7.7 Voice Grade Service (Cont'd)

7.7.5 Rates and Charges (Cont'd)

	USOC	Monthly Rate
(C) Optional Features and Functions (Cont'd)		
(8) Signaling Capability - Per termination	XSS++	$13.19
AB		
AC		
CT		
DX		
DY		
EA		
EB		
EC		
EX		
GO		
GS		
LA		
LB		
LC		
LO		
LR		
LS		
RV		
SF		

7. Special Access Service (Cont'd)

7.7 Voice Grade Service (Cont'd)

7.7.5 Rates and Charges (Cont'd)

	USOC	Monthly Rate
(C) Optional Features and Functions (Cont'd)		
(9) Selective Signaling Arrangement		
- Per arrangement	USZ	$14.83
(10) Transfer Arrangement (key activated* or dial up**)		
- Per four port arrangement including control channel termination***	USY	3.17
- Per five port arrangement including control channel termination***	US5	7.23

* The key activated control channel is rated as a Metallic Channel Termination and Channel Mileage, if applicable.

** The Dial-up option requires the customer to purchase the Controller Arrangement from 13.3.5 following.

*** An additional Channel Termination charge will apply whenever a spare channel is configured as a leg to the customer designated premises. Additional channel mileage charges will also apply when the transfer arrangement is not located in the customer designated premises serving wire center.

7. Special Access Service (Cont'd)

7.8 Video Service

7.8.1 Basic Channel Description

A video channel is a channel with one-way transmission capability for a standard 525 line/60 field monochrome, or National Television Systems Committee color, video signal and one or two associated 5 or 15 kHz audio signal(s). The associated audio signal(s) may be either duplexed or provided as one or two separate channels. The provision and the bandwidth of the associated audio signal(s) is a function of the channel interface selected by the customer. Video channels are provided between customer designated premises or between a customer designated premises and a Telephone Company hub.

Special Access Service TV1 is suitable for use as part of the facilities required to provide intrastate video and audio closed circuit (non-broadcast) services.

7.8.2 Technical Specifications Packages

Parameter	Package TV-1	Package TV-2
Amplitude vs. Frequency Response		
Chrominance/Luminance Inequalities		
Gain	X	X
Delay	X	X
Chrominance/Luminance Intermodulation		
Chrominance Nonlinear Gain		
Chrominance Nonlinear Phase		
Crosstalk		X
Differential Gain	X	X
Differential Phase	X	X
Dynamic Gain (picture and sync signal)		
Field-Time Distortion	X	X
Gain/Frequency Distortion	X	X
Gain Stability	X	X
Insertion Gain	X	X
Line-Time Distortion	X	X
Long-Time Distortion	X	X

7. Special Access Service (Cont'd)

7.8 Video Service (Cont'd)

7.8.2 Technical Specifications Packages (Cont'd)

Parameter	Package TV-1	Package TV-2
Luminance Nonlinearity		
Luminance Signal/CCIR Weighted Noise	X	X
Short-Time Distortion		
2 T Pulse	X	X
T - Bar Ringing	X	X
Signal/15 kHz Flat Weighted Noise	X	X
Signal/Low Frequency Noise		
Stereo Gain Difference	X	
Stereo Phase Difference	X	
Total Harmonic Distortion	X	X
Transient Sync Signal Non-Linearity		
Video/Audio Delay Difference		

The technical specifications are delineated in Technical Reference TR-NPL-000338 and associated Addendum.

7.8.3 Channel Interfaces

The following channel interfaces (CIs) define the bandwidth and the provision of the audio signal(s) associated with a Video channel:

CI	Audio Bandwidth	Provision
2TV6-1	15kHz	1 Channel, duplexed
2TV6-2	15kHz	2 Channels, duplexed
2TV7-1	15kHz	1 Channel, duplexed

7. Special Access Service (Cont'd)

7.8 Video Service (Cont'd)

7.8.3 Channel Interfaces (Cont'd)

CI	Bandwidth	Provision
2TV7-2	15kHz	2 Channels, duplexed
4TV6-5	5kHz	1 Channel, separate
4TV6-15	15kHz	1 Channel, separate
4TV7-5	5kHz	1 Channel, separate
4TV7-15	15kHz	1 Channel, separate
6TV6-5	5kHz	2 Channels, separate
6TV6-15	15kHz	2 Channels, separate
6TV7-5	5kHz	2 Channels, separate
6TV7-15	15kHz	2 Channels, separate

Compatible channel interfaces are set forth in 15.3 following.

ACCESS SERVICE

7. Special Access Service (Cont'd)

7.8 Video Service (Cont'd)

7.8.4 Rates and Charges	USOC	Monthly Rate	Daily* Rate	Nonrecurring Charge Monthly	Nonrecurring Charge Daily
(A) Channel Termination - Per Termination - TV-1 or 2	TMEV1	$1,493.35	$821.34	None	None

(B) Channel Mileage	USOC	Monthly Rate	Daily Rate
(1) Channel Mileage Facility - Per Mile - TV-1 or 2	CMF	$1,125.33	$ 618.93
(2) Channel Mileage Termination - Per Termination - TV-1 or 2	CMT	$5,547.52	$3,051.14

*Daily rates will be topped and maximum rates derived as set forth in 7.2.2(B) preceding.

7. Special Access Service (Cont'd)

7.9 Digital Data Service

7.9.1 Basic Channel Description

A Digital Data channel is a channel for duplex four-wire transmission of synchronous serial data at the rate of 2.4, 4.8, 9.6, 19.2, 56 or 64 kbps*. The actual data rate is a function of the channel interface selected by the customer. The channel provides a synchronous service with timing provided by the Telephone Company through the Telephone Company's facilities to the customer in the received bit stream. Digital Data channels are only available via Telephone Company designated hubs and are provided between customer designated premises or between a customer designated premises and a Telephone Company hub or hubs.

The customer shall be responsible for providing the Channel Service Unit-type equipment or other Network Channel Terminating Equipment associated with the Digital Data channel at the customer premises.

7.9.2 Technical Specifications Packages

	Package D-					
Parameter	1	2	3	4	5	6
Error-Free Seconds	X	X	X	X	X	X

The Telephone Company will provide a channel capable of meeting a monthly average performance equal to or greater than 99.875% error-free seconds (if provided through a Digital Data hub) while the channel is in service, if it is measured through a CSU equivalent which is designed, manufactured, and maintained to conform with the specifications contained in Technical Reference PUB 62310.

Voltages which are compatible with Digital Data Service are delineated in Technical Reference TR-NPL-000341.

7.9.3 Channel Interfaces

The following channel interfaces (CIs) define the bit rates that are available for a Digital Data channel:

*When 64 kbps service is multiplexed on a DS1 High Capacity service, the DS1 service must be equipped to provide clear channel capability.

7. Special Access Service (Cont'd)

7.9 Digital Data Service (Cont'd)

7.9.3 Channel Interfaces (Cont'd)

CI	Data Rate
DU-24	2.4 kbps
DU-48	4.8 kbps
DU-96	9.6 kbps
DU-19	19.2 kbps
DU-56	56.0 kbps
DU-64	64.0 kbps

Compatible channel interfaces are set forth in 15.3 following.

7.9.4 Optional Features and Functions

(A) Central Office Bridging Capability

The bridging functions performed are to connect three or more customer designated premises in a multipoint arrangement. Bridging is not available on a 64.0 kbps channel.

(B) DS0 to Subrate

An arrangement that converts a DS0-B 64.0 kbps channel to subspeeds of up to twenty 2.4 kbps, ten 4.8 kbps or five 9.6 kbps DS0-A channels using digital time division multiplexing.

(C) Secondary Channel Capability

The secondary channel option provides the customer with the capability to derive an independent, slower speed auxiliary (secondary) channel that operates in parallel with a primary Digital Data Channel without reducing the operating speed of the primary channel. It is available for all speeds of 2.4, 4.8, 9.6, 19.2 and 56 kbps channels. For 56 kbps channels, the option may be used only in two-point configurations which do not require the installation of loop repeater equipment. The technical parameters for the channels with a secondary channel option are set forth in Technical Publication - PUB 62310. The speeds of the secondary channels are as follows:

133 bps with a primary 2.4 kbps channel
266 bps with a primary 4.8 kbps channel
533 bps with a primary 9.6 kbps channel
1,066 bps with a primary 19.2 kbps channel
2,666 bps with a primary 56 kbps channel

This optional feature is subject to availability.

7. Special Access Service (Cont'd)

7.9 Digital Data Service (Cont'd)

7.9.4 Optional Features and Functions (Cont'd)

(D) Transfer Arrangement

An arrangement that affords the customer an additional measure of protection and/or flexibility in the use of their access channel(s) on a 1xN basis. The arrangement can be utilized to transfer a leg of a Special Access Service to either a spare or working channel that terminates in either the same or a different customer designated premises. This arrangement is only available at a Telephone Company designated hub. A key activated or dial-up control service is required to operate the transfer arrangement. A spare channel, if required, is not included as a part of the option.

The following table shows the technical specifications packages with which the option features and functions are available.

		Available with Technical Specifications Package D			
		1	2	3	4
Central Office Bridging Capability		X	X	X	X
DS0 to Subrate		X	X	X	
Secondary Channel Capability*	X	X	X	X	
Transfer Arrangement	X	X	X	X	

* Subject to availability.

7. Special Access Service (Cont'd)

7.9 Digital Data Service (Cont'd)

7.9.5 Rates and Charges

	USOC	Monthly Rate	Nonrecurring Charge
(A) Channel Termination			
- Per termination			
- 2.4 kbps	T6ECS	$56.73	$238.00
- 4.8 kbps	T6ECS	$56.73	$238.00
- 9.6 kbps	T6ECS	$56.73	$238.00
- 19.2 kbps	T6ECS	$56.73	$238.00
- 56.0 kbps	T6ECS	$56.73	$238.00
- 64.0 kbps	T6ECS	$56.73	$238.00

	USOC	Monthly Rate
(B) Channel Mileage		
(1) Channel Mileage Facility		
- Per Mile		
- 2.4 kbps	CMF	$1.60
- 4.8 kbps	CMF	$1.60
- 9.6 kbps	CMF	$1.60
- 19.2 kbps	CMF	$1.60
- 56 kbps	CMF	$1.60
- 64 kbps	CMF	$1.60
(2) Channel Mileage Termination		
- Per Termination		
- 2.4 kbps	CMT	$13.02
- 4.8 kbps	CMT	$13.02
- 9.6 kbps	CMT	$13.02
- 19.2 kbps	CMT	$13.02
- 56 kbps	CMT	$13.02
- 64 kbps	CMT	$13.02

7. Special Access Service (Cont'd)

7.9 Digital Data Service (Cont'd)

7.9.5 Rates and Charges (Cont'd)

(C) Optional Features and Functions

	USOC	Monthly Rate	Nonrecurring Charge
(1) Bridging - Per port	BCNDA	$25.77	None
(2) DS0 to Subrate Multiplexing - - Per arrangement - up to 20 2.4 kbps - up to 10 4.8 kbps - up to 5 9.6 kbps			
All Subrates	SRM	$376.99	None
(3) Secondary Channel Capability	SCC	ICB	ICB

7. Special Access Service (Cont'd)

7.10 High Capacity Service

7.10.1 Basic Channel Description

A High Capacity channel is a channel for the transmission of nominal 1.544 Mbps (DS1) or 44.736 Mbps (DS3) isochronous serial data. The actual bit rate is a function of the channel interface selected by the customer. High Capacity channels are provided between customer designated premises or between a customer designated premises and a Telephone Company hub or hubs.

The customer may provide the Network Channel Terminating Equipment associated with the High Capacity channel at the customer's premises.

DS3 Channel Terminations are available utilizing an Electrical or Optical Interface. The Interfaces will have the characteristics of their respective signals at the Point of Termination.

Electrical Interface Channel Terminations will be provisioned utilizing Telephone Company provided equipment.

Optical Interface Channel Terminations will be provisioned utilizing Telephone Company provided equipment in the serving wire center. The Telephone Company will identify approved equipment types for use in conjunction with Telephone Company provided equipment. The customer must select and provide a system from this equipment at their premises.

7. Special Access Service (Cont'd)

7.10 High Capacity Service (Cont'd)

7.10.2 Technical Specifications Packages

	Package		
	HC1		HC3
Parameters			
Error-Free Seconds	X		
Optional Features and Functions			
Automatic Loop Transfer	X		
Battery Back-Up		X	
Central Office Multiplexing:			
DS1 to Voice	X		
DS1 to DSO	X		
DS3 to DS1			X
Clear Channel Capability	X		

A channel with technical specifications package HC1 will be capable of an error-free second performance of 98.75% over a continuous 24 hour period as measured at the 1.544 Mbps rate through a CSU equivalent which is designed, manufactured, and maintained to conform with the specifications contained in Technical Reference PUB 62411.

7. Special Access Service (Cont'd)

7.10 High Capacity Service (Cont'd)

7.10.3 Channel Interfaces

The following channel interfaces (CIs) define the bit rates that are available for a High Capacity channel:

CI	Bit Rate
DS-15	1.544 Mbps (DS1)
DS-44	44.736 Mbps (DS3)

Compatible channel interfaces are set forth in 15.3 following.

7.10.4 Optional Features and Functions

(A) Automatic Loop Transfer

The Automatic Loop Transfer provides protection on a 1xN basis against failure of the facilities between a customer designated premises and the wire center serving that premises. Protection is furnished through the use of a switching arrangement that automatically switches to a spare channel line when a working line fails. The spare channel is not included as a part of the option. This option requires compatible equipment at both the serving wire center and the customer premises. The customer is responsible for providing the equipment at its premises. Equipment at the customer designated premises will be provided under tariff only if it existed in the Telephone Company inventory as of November 18, 1983.

ACCESS SERVICE

7. Special Access Service (Cont'd)

7.10 High Capacity Service (Cont'd)

7.10.4 Optional Features and Functions (Cont'd)

(B) Battery Back-Up

Battery Back-up is an optional DC power source to be used for emergency power for the channelizing equipment.

7. Special Access Service (Cont'd)

7.10 High Capacity Service (Cont'd)

7.10.4 Optional Features and Functions (Cont'd)

(C) Central Office Multiplexing

(1) DS1 to Voice

An arrangement that converts a 1.544 Mbps channel to 24 channels for use with Voice Grade Services. A channel at this DS1 to the Hub can also be used for a Digital Data Service.

(2) DS1 to DS0

An arrangement that converts a 1.544 Mbps channel to 23 64.0 Kbps channels utilizing digital time division multiplexing.

(3) DS3 to DS1

An arrangement that converts a 44.736 Mbps channel to 28 DS1 channels using digital time division multiplexing.

7. Special Access Service (Cont'd)

7.10 High Capacity Service (Cont'd)

7.10.4 Optional Features and Functions (Cont'd)

(D) Clear Channel Capability (CCC)

(1) CCC is an arrangement that allows a customer to transport 1.536 Mbps information rate signals over a 1.544 Mbps High Capacity channel or over a 1.544 Mbps High Capacity channel derived from a multiplexed 44.736 Mbps High Capacity channel with no constraint on the quantity or sequence of one and zero bits. This arrangement requires the customer signal at the channel interface to conform to Bipolar with Eight Zero Substitution (B8ZS) line code as described in Technical Reference TR-NPL-000054 and Technical Reference TR-INS-000342.

(2) CCC is provided, subject to availability of facilities, on DS1/1.544 Mbps High Capacity channels between two customer designated premises and on multiplexed DS3/44.736 Mbps High Capacity channels or multiplexed DS1/1.544 Mbps High Capacity channels or multiplexed DS1/1.544 Mbps High Capacity channels* between a telephone company hub office and a customer designated premises. The wire centers providing CCC are identified in NATIONAL EXCHANGE CARRIER ASSOCIATION, INC., WIRE CENTER INFORMATION, TARIFF F.C.C. NO. 4.

(3) No charge applies when the CCC optional feature is ordered at the same time the High Capacity service is ordered. If the CCC optional feature is ordered as an addition to an existing High Capacity Service, a nonrecurring charge is applicable as set forth in 7.10.5 (C)(3) following. The customer must agree to out-of-service periods required to add this feature to an existing High Capacity Service.

*Available only on a DS1-to-Digital multiplexed configuration.

7. Special Access Service (Cont'd)

7.10 High Capacity Service (Cont'd)

7.10.5 Rates and Charges - DS1

	USOC	Monthly Rate	Nonrecurring Charge
(A) Channel Termination - Per Termination - 1.544 Mbps	TMECS	$99.72	$499.64

	USOC	Monthly Rate
(B) Channel Mileage		
(1) Channel Mileage Facility - Per Mile - 1.544 Mbps	CMF	$ 12.00
(2) Channel Mileage Termination - Per Termination - 1.544 Mbps	CMT	$140.20

7. Special Access Service (Cont'd)

7.10 High Capacity Service (Cont'd)

7.10.5 Rates and Charges - DS1 (Cont'd)

	USOC	Monthly Rate
(1) Multiplexing, per arrangement		
DS1 to Voice*	MQ1	$400.50
DS1 to DS0	QMU	400.50

*A channel of this DS1 to the Hub can be used for Digital Data service.

7. Special Access Service (Cont'd)

7.10 High Capacity Service (Cont'd)

7.10.5 Rates and Charges - DS1 (Cont'd)

(C) Optional Features and Functions (Cont'd)

	USOC	Monthly Rate
(2) Automatic Loop Transfer - Per arrangement*	T59	$335.56

	USOC	Monthly Rate	Nonrecurring Charge
(3) Clear Channel Capability - Per 1.544 Mbps Transmission Path	CLR	None	$101.28

* An additional Channel Termination charge will apply whenever the spare line is provided as a leg to the customer premises.

ACCESS SERVICE

7. Special Access Service (Cont'd)

7.10 High Capacity Service (Cont'd)

7.10.6 Rates and Charges - DS3

7.10.6.1 Monthly Rates and Charges Density Pricing Zone 1

	USOC	Monthly Rate	Nonrecurring Charges
(A) Channel Termination Per Termination			
(1) Electrical Interface			
Capacity of 1 Interface	THJAX	$1,333.33	$430.00
Capacity of 3 Interface	THJJX	1,950.00	
- Per DS3	TH5JX	190.46	430.00
Capacity of 6 Interface	HDJAX	3,340.00	
- Per DS3	HD5AX	144.08	430.00
Capacity of 12 Interface	THJNX	4,600.00	
- Per DS3	TH5NX	144.08	430.00
(2) Optical Interface			
Capacity of 1 Interface	TH2AX	$1,355.00	$430.00
Capacity of 3 Interface	TH2JX	1,800.00	
- Per DS3	TH8JX	128.86	430.00
Capacity of 6 Interface	HD2AX	2,800.00	
- Per DS3	HD8AX	97.31	430.00
Capacity of 12 Interface	TH2NX	3,340.00	
- Per DS3	TH8NX	97.31	430.00

ACCESS SERVICE

7. Special Access Service (Cont'd)

7.10 High Capacity Service (Cont'd)

7.10.6 Rates and Charges - DS3 (Cont'd)

7.10.6.1 Monthly Rates and Charges Density Pricing Zone 1 (Cont'd)

	USOC	Monthly Rate	Nonrecurring Charges
(B) Channel Mileage			
(1) Channel Mileage Facility - Per Mile	CMF	$120.00	None
(2) Channel Mileage Termination * - Per Termination	CMT	$530.00	$500.00
(C) Optional Features and Functions			
(1) Multiplexing, Per Arrangement DS3 to DS1	MQ3	$290.89	
(2) Battery Back-Up, Per Arrangement	BU6	$ 92.00	

* Nonrecurring charges apply to Channel Mileage Terminations when installed without a Channel Termination.

ACCESS SERVICE

7. Special Access Service (Cont'd)

7.10 High Capacity Service (Cont'd)

7.10.6 Rates and Charges - DS3 (Cont'd)

7.10.6.2 36 Month Rates and Charges Density Pricing Zone 1

	USOC	Monthly Rate	Nonrecurring Charges
(A) Channel Termination Per Termination			
(1) Electrical Interface			
Capacity of 1 Interface	THJAX	$1,301.77	$430.00
Capacity of 3 Interface	THJJX	1,756.57	
- Per DS3	TH5JX	171.57	430.00
Capacity of 6 Interface	HDJAX	2,880.00	
- Per DS3	HD5AX	124.15	430.00
Capacity of 12 Interface	THJNX	4,200.00	
- Per DS3	TH5NX	124.15	430.00
(2) Optical Interface			
Capacity of 1 Interface	TH2AX	$1,310.00	$430.00
Capacity of 3 Interface	TH2JX	1,600.00	
- Per DS3	TH8JX	114.54	430.00
Capacity of 6 Interface	HD2AX	2,600.00	
- Per DS3	HD8AX	90.36	430.00
Capacity of 12 Interface	TH2NX	3,400.00	
- Per DS3	TH8NX	90.36	430.00

7. Special Access Service (Cont'd)

7.10 High Capacity Service (Cont'd)

7.10.6 Rates and Charges - DS3 (Cont'd)

7.10.6.2 36 Month Rates and Charges Density Pricing Zone 1 (Cont'd)

	USOC	Monthly Rate	Nonrecurring Charges
(B) Channel Mileage			
(1) Channel Mileage Facility - Per Mile	CMF	$110.00	None
(2) Channel Mileage Termination * - Per Termination	CMT	$480.00	$500.00
(C) Optional Features and Functions			
(1) Multiplexing, Per Arrangement DS3 to DS1	MQ3	$290.89	
(2) Battery Back-Up, Per Arrangement	BU6	$ 92.00	

* Nonrecurring charges apply to Channel Mileage Terminations when installed without a Channel Termination.

ACCESS SERVICE

7. Special Access Service (Cont'd)

7.10 High Capacity Service (Cont'd)

7.10.6 Rates and Charges - DS3 (Cont'd)

7.10.6.3 60 Month Rates and Charges Density Pricing Zone 1

	USOC	Monthly Rate	Nonrecurring Charges
(A) Channel Termination Per Termination			
(1) Electrical Interface			
Capacity of 1 Interface	THJAX	$1,190.00	$430.00
Capacity of 3 Interface	THJJX	1,600.00	
- Per DS3	TH5JX	156.28	430.00
Capacity of 6 Interface	HDJAX	2,750.00	
- Per DS3	HD5AX	118.63	430.00
Capacity of 12 Interface	THJNX	3,800.00	
- Per DS3	TH5NX	118.63	430.00
(2) Optical Interface			
Capacity of 1 Interface	TH2AX	$1,200.00	$430.00
Capacity of 3 Interface	TH2JX	1,480.00	
- Per DS3	TH8JX	105.95	430.00
Capacity of 6 Interface	HD2AX	2,300.00	
- Per DS3	HD8AX	79.94	430.00
Capacity of 12 Interface	TH2NX	3,000.00	
- Per DS3	TH8NX	79.94	430.00

ACCESS SERVICE

7. Special Access Service (Cont'd)

7.10 High Capacity Service (Cont'd)

7.10.6 Rates and Charges - DS3 (Cont'd)

7.10.6.3 60 Month Rates and Charges Density Pricing Zone 1 (Cont'd)

	USOC	Monthly Rate	Nonrecurring Charges
(B) Channel Mileage			
(1) Channel Mileage Facility - Per Mile	CMF	$ 99.00	None
(2) Channel Mileage Termination * - Per Termination	CMT	$430.00	$500.00
(C) Optional Features and Functions			
(1) Multiplexing, Per Arrangement DS3 to DS1	MQ3	$290.89	
(2) Battery Back-Up, Per Arrangement	BU6	$ 92.00	

* Nonrecurring charges apply to Channel Mileage Terminations when installed without a Channel Termination.

ACCESS SERVICE

7. Special Access Service (Cont'd)

7.10 High Capacity Service (Cont'd)

7.10.6 Rates and Charges - DS3

7.10.6.4 Monthly Rates and Charges Density Pricing Zone 2

	USOC	Monthly Rate	Nonrecurring Charges
(A) Channel Termination Per Termination			
(1) Electrical Interface			
Capacity of 1 Interface	THJAX	$1,348.11	$430.00
Capacity of 3 Interface	THJJX	1,950.00	
- Per DS3	TH5JX	190.46	430.00
Capacity of 6 Interface	HDJAX	3,400.00	
- Per DS3	HD5AX	146.66	430.00
Capacity of 12 Interface	THJNX	4,750.00	
- Per DS3	TH5NX	146.66	430.00
(2) Optical Interface			
Capacity of 1 Interface	TH2AX	$1,370.02	$430.00
Capacity of 3 Interface	TH2JX	1,800.00	
- Per DS3	TH8JX	128.86	430.00
Capacity of 6 Interface	HD2AX	2,850.00	
- Per DS3	HD8AX	99.06	430.00
Capacity of 12 Interface	TH2NX	3,750.00	
- Per DS3	TH8NX	99.06	430.00

ACCESS SERVICE

7. Special Access Service (Cont'd)

7.10 High Capacity Service (Cont'd)

7.10.6 Rates and Charges - DS3 (Cont'd)

7.10.6.4 Monthly Rates and Charges Density Pricing Zone 2 (Cont'd)

	USOC	Monthly Rate	Nonrecurring Charges
(B) Channel Mileage			
(1) Channel Mileage Facility - Per Mile	CMF	$120.00	None
(2) Channel Mileage Termination * - Per Termination	CMT	$530.00	$500.00
(C) Optional Features and Functions			
(1) Multiplexing, Per Arrangement DS3 to DS1	MQ3	$290.89	
(2) Battery Back-Up, Per Arrangement	BU6	$ 92.00	

* Nonrecurring charges apply to Channel Mileage Terminations when installed without a Channel Termination.

ACCESS SERVICE

7. Special Access Service (Cont'd)

7.10 High Capacity Service (Cont'd)

7.10.6 Rates and Charges - DS3 (Cont'd)

7.10.6.5 36 Month Rates and Charges Density Pricing Zone 2

	USOC	Monthly Rate	Nonrecurring Charges
(A) Channel Termination Per Termination			
(1) Electrical Interface			
Capacity of 1 Interface	THJAX	$1,300.00	$430.00
Capacity of 3 Interface	THJJX	1,800.00	
- Per DS3	TH5JX	175.81	430.00
Capacity of 6 Interface	HDJAX	3,100.00	
- Per DS3	HD5AX	133.72	430.00
Capacity of 12 Interface	THJNX	4,300.00	
- Per DS3	TH5NX	133.72	430.00
(2) Optical Interface			
Capacity of 1 Interface	TH2AX	$1,350.00	$430.00
Capacity of 3 Interface	TH2JX	1,650.00	
- Per DS3	TH8JX	118.12	430.00
Capacity of 6 Interface	HD2AX	2,550.00	
- Per DS3	HD8AX	88.63	430.00
Capacity of 12 Interface	TH2NX	3,350.00	
- Per DS3	TH8NX	88.63	430.00

7. Special Access Service (Cont'd)

7.10 High Capacity Service (Cont'd)

7.10.6 Rates and Charges - DS3 (Cont'd)

7.10.6.5 36 Month Rates and Charges Density Pricing Zone 2 (Cont'd)

	USOC	Monthly Rate	Nonrecurring Charges
(B) Channel Mileage			
(1) Channel Mileage Facility - Per Mile	CMF	$100.00	None
(2) Channel Mileage Termination * - Per Termination	CMT	$480.00	$500.00
(C) Optional Features and Functions			
(1) Multiplexing, Per Arrangement DS3 to DS1	MQ3	$290.89	
(2) Battery Back-Up, Per Arrangement	BU6	$ 92.00	

* Nonrecurring charges apply to Channel Mileage Terminations when installed without a Channel Termination.

ACCESS SERVICE

7. Special Access Service (Cont'd)

7.10 High Capacity Service (Cont'd)

7.10.6 Rates and Charges - DS3 (Cont'd)

7.10.6.6 60 Month Rates and Charges Density Pricing Zone 2

	USOC	Monthly Rate	Nonrecurring Charges
(A) Channel Termination Per Termination			
(1) Electrical Interface			
Capacity of 1 Interface	THJAX	$1,150.00	$430.00
Capacity of 3 Interface	THJJX	1,550.00	
- Per DS3	TH5JX	151.39	430.00
Capacity of 6 Interface	HDJAX	2,700.00	
- Per DS3	HD5AX	116.47	430.00
Capacity of 12 Interface	THJNX	3,750.00	
- Per DS3	TH5NX	116.47	430.00
(2) Optical Interface			
Capacity of 1 Interface	TH2AX	$1,200.00	$430.00
Capacity of 3 Interface	TH2JX	1,460.00	
- Per DS3	TH8JX	104.52	430.00
Capacity of 6 Interface	HD2AX	2,300.00	
- Per DS3	HD8AX	79.94	430.00
Capacity of 12 Interface	TH2NX	3,000.00	
- Per DS3	TH8NX	79.94	430.00

7. Special Access Service (Cont'd)

7.10 High Capacity Service (Cont'd)

7.10.6 Rates and Charges - DS3 (Cont'd)

7.10.6.6 60 Month Rates and Charges Density Pricing Zone 2 (Cont'd)

	USOC	Monthly Rate	Nonrecurring Charges
(B) Channel Mileage			
(1) Channel Mileage Facility - Per Mile	CMF	$ 99.00	None
(2) Channel Mileage Termination * - Per Termination	CMT	$430.00	$500.00
(C) Optional Features and Functions			
(1) Multiplexing, Per Arrangement DS3 to DS1	MQ3	$290.89	
(2) Battery Back-Up, Per Arrangement	BU6	$ 92.00	

* Nonrecurring charges apply to Channel Mileage Terminations when installed without a Channel Termination.

ACCESS SERVICE

7. Special Access Service (Cont'd)

7.10 High Capacity Service (Cont'd)

7.10.6 Rates and Charges - DS3

7.10.6.7 Monthly Rates and Charges Density Pricing Zone 3

	USOC	Monthly Rate	Nonrecurring Charges
(A) Channel Termination Per Termination			
(1) Electrical Interface			
Capacity of 1 Interface	THJAX	$1,696.23	$430.00
Capacity of 3 Interface	THJJX	2,500.00	
- Per DS3	TH5JX	244.19	430.00
Capacity of 6 Interface	HDJAX	4,300.00	
- Per DS3	HD5AX	185.49	430.00
Capacity of 12 Interface	THJNX	6,000.00	
- Per DS3	TH5NX	185.49	430.00
(2) Optical Interface			
Capacity of 1 Interface	TH2AX	$1,723.81	$430.00
Capacity of 3 Interface	TH2JX	2,300.00	
- Per DS3	TH8JX	164.65	430.00
Capacity of 6 Interface	HD2AX	3,600.00	
- Per DS3	HD8AX	125.11	430.00
Capacity of 12 Interface	TH2NX	4,740.00	
- Per DS3	TH8NX	125.11	430.00

7. Special Access Service (Cont'd)

7.10 High Capacity Service (Cont'd)

7.10.6 Rates and Charges - DS3 (Cont'd)

7.10.6.7 Monthly Rates and Charges Density Pricing Zone 3 (Cont'd)

	USOC	Monthly Rate	Nonrecurring Charges
(B) Channel Mileage			
(1) Channel Mileage Facility - Per Mile	CMF	$135.14	None
(2) Channel Mileage Termination * - Per Termination	CMT	$671.62	$500.00
(C) Optional Features and Functions			
(1) Multiplexing, Per Arrangement DS3 to DS1	MQ3	$290.89	
(2) Battery Back-Up, Per Arrangement	BU6	$ 92.00	

* Nonrecurring charges apply to Channel Mileage Terminations when installed without a Channel Termination.

ACCESS SERVICE

7. Special Access Service (Cont'd)

7.10 High Capacity Service (Cont'd)

7.10.6 Rates and Charges - DS3 (Cont'd)

7.10.6.8 36 Month Rates and Charges Density Pricing Zone 3

	USOC	Monthly Rate	Nonrecurring Charges
(A) Channel Termination Per Termination			
(1) Electrical Interface			
Capacity of 1 Interface	THJAX	$1,300.00	$430.00
Capacity of 3 Interface	THJJX	1,800.00	
- Per DS3	TH5JX	175.81	430.00
Capacity of 6 Interface	HDJAX	3,100.00	
- Per DS3	HD5AX	133.72	430.00
Capacity of 12 Interface	THJNX	4,300.00	
- Per DS3	TH5NX	133.72	430.00
(2) Optical Interface			
Capacity of 1 Interface	TH2AX	$1,350.00	$430.00
Capacity of 3 Interface	TH2JX	1,650.00	
- Per DS3	TH8JX	118.12	430.00
Capacity of 6 Interface	HD2AX	2,550.00	
- Per DS3	HD8AX	88.63	430.00
Capacity of 12 Interface	TH2NX	3,350.00	
- Per DS3	TH8NX	88.63	430.00

ACCESS SERVICE

7. Special Access Service (Cont'd)

7.10 High Capacity Service (Cont'd)

7.10.6 Rates and Charges - DS3 (Cont'd)

7.10.6.8 36 Month Rates and Charges Density Pricing Zone 3 (Cont'd)

	USOC	Monthly Rate	Nonrecurring Charges
(B) Channel Mileage			
(1) Channel Mileage Facility - Per Mile	CMF	$100.00	None
(2) Channel Mileage Termination * - Per Termination	CMT	$480.00	$500.00
(C) Optional Features and Functions			
(1) Multiplexing, Per Arrangement DS3 to DS1	MQ3	$290.89	
(2) Battery Back-Up, Per Arrangement	BU6	$ 92.00	

* Nonrecurring charges apply to Channel Mileage Terminations when installed without a Channel Termination.

ACCESS SERVICE

7. Special Access Service (Cont'd)

7.10 High Capacity Service (Cont'd)

7.10.6 Rates and Charges - DS3 (Cont'd)

7.10.6.9 60 Month Rates and Charges Density Pricing Zone 3

	USOC	Monthly Rate	Nonrecurring Charges
(A) Channel Termination Per Termination			
(1) Electrical Interface			
Capacity of 1 Interface	THJAX	$1,500.00	$430.00
Capacity of 3 Interface	THJJX	2,000.00	
- Per DS3	TH5JX	195.35	430.00
Capacity of 6 Interface	HDJAX	3,450.00	
- Per DS3	HD5AX	148.82	430.00
Capacity of 12 Interface	THJNX	4,800.00	
- Per DS3	TH5NX	148.82	430.00
(2) Optical Interface			
Capacity of 1 Interface	TH2AX	$1,500.00	$430.00
Capacity of 3 Interface	TH2JX	1,880.00	
- Per DS3	TH8JX	134.58	430.00
Capacity of 6 Interface	HD2AX	2,900.00	
- Per DS3	HD8AX	100.79	430.00
Capacity of 12 Interface	TH2NX	3,800.00	
- Per DS3	TH8NX	100.79	430.00

ACCESS SERVICE

7. Special Access Service (Cont'd)

7.10 High Capacity Service (Cont'd)

7.10.6 Rates and Charges - DS3 (Cont'd)

7.10.6.9 60 Month Rates and Charges Density Pricing Zone 3 (Cont'd)

	USOC	Monthly Rate	Nonrecurring Charges
(B) Channel Mileage			
(1) Channel Mileage Facility - Per Mile	CMF	$110.00	None
(2) Channel Mileage Termination * - Per Termination	CMT	$545.00	$500.00
(C) Optional Features and Functions			
(1) Multiplexing, Per Arrangement DS3 to DS1	MQ3	$290.89	
(2) Battery Back-Up, Per Arrangement	BU6	$ 92.00	

* Nonrecurring charges apply to Channel Mileage Terminations when installed without a Channel Termination.

ACCESS SERVICE

7. Special Access Service (Cont'd)

7.11 Individual Case Filings

Rates and charges for Special Access Service provided on an individual case basis are filed following:

ACCESS SERVICE

Section 8

Reserved for future use

ACCESS SERVICE

Section 9

Reserved for future use

ACCESS SERVICE

10. Special Federal Government Access Services

10.1 General

This section covers Special Access Services that are provided to a customer for use only by agencies or branches of the Federal Government and other users authorized by the Federal Government. Services provided to state emergency operations centers are included. These services provide for command and control communications, including communications for national security, emergency preparedness and presidential requirements. They are required to assure continuity of Government in emergency and crisis situations and to provide for national security.

Services for command and control communications and for national security and emergency preparedness sometimes require short notice and short duration service provisions. These provisions are especially needed to meet presidential requirements or in response to natural, man-made, or declared emergencies. Requirements of this type cannot be forecasted and are usually needed for a relatively short period. The provision of service under these conditions may require the availability of facilities, such as portable microwave equipment, which are provided on a temporary basis by the Telephone Company or customer.

10.2 Emergency Conditions

These services will be provided on the date requested or as soon as possible thereafter when the emergency falls into one of the following categories:

- State of crisis declared by the National Command Authorities (includes commitments made to the National Communications System in the "National Plan for Emergencies and Major Disasters").

ACCESS SERVICE

10. Special Federal Government Access Services (Cont'd)

10.2 Emergency Conditions (Cont'd)

- Efforts to protect endangered U.S. personnel or property both in the U.S. and abroad. (Includes space vehicle recovery and protection efforts.)

- Communications requirements resulting from hostile action, a major disaster or a major civil disturbance.

- The director (Cabinet level) of a Federal department, Commander of a Unified/Specified Command, or head of a military department has certified that a communications requirement is so critical to the protection of life and property or to the National Defense that it must be processed immediately.

- Political unrest in foreign countries which affect the national interest.

- Presidential service.

ACCESS SERVICE

10. Special Federal Government Access Services (Cont'd)

10.3 Safeguarding of Service

10.3.1 Facility Availability

In order to insure communications during periods of emergency, the Telephone Company will, in accordance with 2.1.2(B) preceding and within the limits of good management, make available the necessary facilities to restore service in the event of damage or to provide temporary emergency service.

In order to meet the requirements of agencies or branches of the Federal Government, the Telephone Company may utilize government-owned facilities, when necessary to provide service.

10.4 Federal Government Regulations

In accordance with Federal Government Regulations, all service provided to the Federal Government will be billed in arrears. However, this provision does not apply to other customers that obtain services under the provisions of this tariff to provide their services to the Federal Government.

10. Special Federal Government Access Services (Cont'd)

10.5 Service Offerings to the Federal Government

The following unique services are provided to a customer for use only by agencies or branches of the Federal Government, other authorized users and state emergency operations centers. The rates and charges for these services shall be developed on an individual case basis and shall be consistent with the rates and charges for services offered in other sections of this tariff.

10.5.1 Type and Description

(A) Voice Grade Special Access Services

(1) Voice Grade Secure Communications Type I

Approximate bandwidth of 10-50,000 Hertz. Furnished for two-point secure communications on two-wire or four-wire metallic facilities between an IC premises and an end user's premises. Services are conditioned as follows:

T-3 Conditioning - The absolute loss (referenced to 1 milliwatt) with respect to frequency shall not exceed:

15 dB at 10 Hz
13 dB at 100 Hz
9 dB at 1,000 Hz
20 dB at 10,000 Hz
30 dB at 50,000 Hz

10. Special Federal Government Access Services (Cont'd)

10.5 Service Offerings to the Federal Government (Cont'd)

10.5.1 Type and Description (Cont'd)

(A) Voice Grade Special Access Services (Cont'd)

(1) Voice Grade Secure Communications Type I (Cont'd)

Additional conditioning (available in one or two directions on four-wire facilities only) to provide the following characteristics:

The absolute loss (referenced to one milliwatt) with respect to frequency shall not exceed:

0 dB at 1,000 Hz
± 1 dB between 1,000 Hz and 40,000 Hz
± 2 dB between 10 Hz and 50,000 Hz
(+ means more loss)

The net loss of the conditioned service (with or without additional conditioning) shall not vary by more than four dB at 1,000 Hz from the levels specified above. Voice frequency signaling or supervisory tones can be transmitted.

(2) Voice Grade Secure Communications Type II

Approximate bandwidth 10-50,000 Hz. Furnished on four-wire metallic facilities for duplex operation for two-point secure communications between an IC premises on an end user's premises and an end user's premises. Services are conditioned as follows:

G-1 Conditioning - The absolute loss with respect to frequency and the net loss variation shall be the same as Voice Grade Secure Communication Type I services without additional conditioning. Voice frequency signaling or supervisory tones can be transmitted.

10. Special Federal Government Access Services (Cont'd)

10.5 Service Offerings to the Federal Government (Cont'd)

10.5.1 Type and Description (Cont'd)

(A) Voice Grade Special Access Services (Cont'd)

(3) Voice Grade Secure Communications Type III

Approximate bandwidth 10-50,000 Hz. Furnished on four-wire metallic facilities for duplex operation for two-point secure communications between an IC premises switch and an end user's premises. Services are conditioned as follows:

G-2 Conditioning - The absolute loss with respect to frequency and the net loss variation from the switch to an end user's premises shall be the same as Voice Grade Secure Communications Type I services without additional conditioning; from an end user's premises to the switch shall be the same as Voice Grade Secure Communications Type I services with additional conditioning. Voice frequency signaling or supervisory tones can be transmitted.

(4) Voice Grade Secure Communications Type IV

Approximate bandwidth 10-50,000 Hz. Furnished on four-wire metallic facilities for duplex operation for two-point secure communication between two IC premises switches. Services are conditioned as follows:

G-3 Conditioning - The absolute loss with respect to frequency and the net loss variation shall be the same in both directions of transmission as Voice Grade Secure Communications Type I services with additional conditioning. Voice frequency signaling or supervisory tones can be transmitted.

10. Special Federal Government Access Services (Cont'd)

10.5 Service Offerings to the Federal Government (Cont'd)

10.5.1 Type and Description (Cont'd)

(B) Wideband Digital Special Access Service

Service arrangements for secured communications to accommodate the transmission of binary digital baseband signals in a random polar format.

(1) Wideband Secure Communications Type I

For transmission at the rate of 18,750 bits per second.

(2) Wideband Secure Communications Type II

For transmission at the rate of 50,000 bits per second.

(3) Wideband Secure Communications Type III

To accommodate the transmission of restored polar two-level facsimile signals with a minimum signal element width of twenty microseconds at a rate of 50,000 bits per second.

To accommodate the transmission of binary digital baseband signals in a random polar format at the rate of 50,000 bits per second.

10.5.2 Mileage Application

Mileage, when used for rate application between the serving wire centers of two customer designated premises, shall be determined by the V and H Coordinates Method as set forth in EXCHANGE CARRIER ASSOCIATION TARIFF F.C.C. No. 4 and administered as set forth in 7.2.5 preceding.

10. Special Federal Government Access Services (Cont'd)

10.5 Service Offerings to the Federal Government (Cont'd)

10.5.3 Rates and Charges

(A) Voice Grade Special Access Service

The provision of T-3 and G conditioned services contemplates station and tandem switching operations, using customer provided equipment, as well as Special Access Service. Separate narrowband or voice grade services, where required by the customer provided equipment or switching operation, are furnished in accordance with the applicable sections of this tariff.

Voice Grade Secure Communications	USOC	Monthly Rates	Nonrecurring Charges	Termination Charges
Type I, each T-3 Conditioning,	GCA++	ICB rates and charges apply		
Additional Conditioning, per service termination	GTO++	ICB rates and charges apply		
Type II, each G-1 Conditioning,	GCB++	ICB rates and charges apply		
Type III, each G-2 Conditioning,	GCC++	ICB rates and charges apply		
Additional Conditioning, per service termination	G20++	ICB rates and charges apply		

ACCESS SERVICE

10. Special Federal Government Access Services (Cont'd)

10.5 Service Offerings to the Federal Government (Cont'd)

10.5.3 Rates and Charges (Cont'd)

(A) Voice Grade Special Access Service (Cont'd)

Voice Grade Secure Communications	USOC	Monthly Rates	Nonrecurring Charges	Termination Charges
Type IV, each G-3 Conditioning,	GCD++	ICB rates and charges apply		
Additional Conditioning, per service termination	G3O++	ICB rates and charges apply		

(B) Wideband Digital Special Access Service

Wideband Secure Communications	USOC	Monthly Rates	Nonrecurring Charges	Termination Charges
Type I, each	GW1++	ICB rates and charges apply		
Type II, each	GW2++	ICB rates and charges apply		
Type III, each	GW3++	ICB rates and charges apply		

(C) Move Charges

(1) When service without a termination charge associated with it, as set forth in (A) and (B) preceding, is moved to a different building, the nonrecurring charge applies; when moved to a new location in the same building, a charge of one-half the nonrecurring charge applies.

10. Special Federal Government Access Services (Cont'd)

10.5 Service Offerings to the Federal Government (Cont'd)

10.5.3 Rates and Charges (Cont'd)

(C) Move Charges (Cont'd)

(2) When service with a termination charge associated with it, as set forth in (A) and (B) preceding, is moved and is reinstalled at a new location, the customer may elect:

- to pay the unexpired portion of the termination charge for the service, if any, with the application of a nonrecurring charge and the establishment of a new termination charge for such service at the new location, or

- to continue service subject to the unexpired portion of the termination charge, if any, and pay the estimated costs of moving such service, provided that the customer requests these charges be quoted prior to ordering the service move. Charges for moving such service will be based on estimated costs attributable to the move.

Move charges include the estimated costs of removal, restoration of services or facilities necessitated by the move, transportation, storage, reinstallation, engineering, labor, supervision, materials, administration, and any other specific items of cost directly attributable to the move.

ACCESS SERVICE

11. Special Facilities Routing of Access Services

11.1 Description of Special Facilities Routing of Access Services

The services provided under this tariff are provided over such routes and facilities as the Telephone Company may elect. Special Facilities Routing is involved when, in order to comply with requirements specified by the customer, the Telephone Company provides Switched Access Service, Special Access Service or Special Federal Government Access Service in a manner which includes one or more of the following conditions:

11.1.1 Diversity

Two or more services must be provided over not more than two different physical routes.

11.1.2 Avoidance

A service must be provided on a route which avoids specified geographical locations.

11.1.3 Cable-Only Facilities

Certain Voice Grade services are provided on Cable-Only Facilities to meet the particular needs of a customer.

Service is provided subject to the availability of Cable-Only facilities. In the event of service failure, restoration will be made through the use of any available facilities as selected by the Telephone Company.

Avoidance and Diversity are available on Switched Access Service as set forth in 6. preceding; Metallic, Telegraph Grade and Voice Grade Special Access Services as set forth in 7.5, 7.6 and 7.7 preceding and Special Federal Government Access Services as set forth in 10.5 preceding. Cable-Only Facilities are available for Switched Access Service as set forth in 6. preceding; Voice Grade Special Access Services as set forth in 7.7 preceding and Special Federal Government Access Services as set forth in 10.5 preceding.

11. Special Facilities Routing of Access Services (Cont'd)

11.1 Description of Special Facilities Routing of Access Services (Cont'd)

In order to avoid the compromise of special routing information, the Telephone Company will provide the required routing information for each specially routed service to only the ordering customer. If requested by the customer, this information will be provided when service is installed and prior to any subsequent changes in routing.

The rates and charges for Special Facilities Routing of Access Services as set forth in 11.2 following are in addition to all other rates and charges that may be applicable for services provided under other sections of this tariff.

11.2 Rates and Charges for Special Facilities Routing of Access Service

The rates and charges for Special Facilities Routing of Access Services are as follows:

11.2.1 Diversity

For each service provided in accordance with 11.1.1 preceding, the rates and charges will be developed on an individual case basis.

USOC

SYD++

11.2.2 Avoidance

For each service provided in accordance with 11.1.2 preceding, the rates and charges will be developed on an individual case basis.

USOC

SYA++

ACCESS SERVICE

11. Special Facilities Routing of Access Services (Cont'd)

11.2 Rates and Charges for Special Facilities Routing of Access Service (Cont'd)

11.2.3 Diversity and Avoidance Combined

For each service provided in accordance with 11.1.1 and 11.1.2 preceding, combined, the rates and charges will be developed on an individual case basis.

USOC
SYB++

11.2.4 Cable-Only Facilities

For each service provided in accordance with 11.1.3 preceding, the rates and charges will be developed on an individual case basis.

USOC

SYC++

12. Specialized Service or Arrangements

12.1 General

Specialized Service or Arrangements may be provided by the Telephone Company, at the request of a customer, on an individual case basis if such service or arrangements meet the following criteria:

- The requested service or arrangements are not offered under other sections of this tariff.
- The facilities utilized to provide the requested service or arrangements are of a type normally used by the Telephone Company in furnishing its other services.
- The requested service or arrangements are provided within a LATA.
- The requested service or arrangements are compatible with other Telephone Company services, facilities, and its engineering and maintenance practices.
- This offering is subject to the availability of the necessary Telephone Company personnel and capital resources.

12.2 Rates and Charges

Rates and charges and additional regulations if applicable, for specialized service or arrangements provided on an individual case basis are filed following:

ACCESS SERVICE

12. Specialized Service or Arrangements

12.1 General

Specialized Service or Arrangements may be provided by the Telephone Company, at the request of a customer, on an individual case basis if such service or arrangements meet the following criteria:

- The requested service or arrangements are not offered under other sections of this tariff.
- The facilities utilized to provide the requested service or arrangements are of a type normally used by the Telephone Company in furnishing its other services.
- The requested service or arrangements are provided within a LATA.
- The requested service or arrangements are compatible with other Telephone Company services, facilities, and its engineering and maintenance practices.
- This offering is subject to the availability of the necessary Telephone Company personnel and capital resources.

12.2 Rates and Charges

Rates and charges and additional regulations if applicable, for specialized service or arrangements provided on an individual case basis are filed following:

13. Additional Engineering, Additional Labor and Miscellaneous Services

In this section normally scheduled working hours are an employee's scheduled work period in any given calendar day (e.g., 7:00 a.m. to 4:00 p.m.) for the application of rates based on working hours. A Miscellaneous Service Order Charge applies to any service, or combination of services ordered simultaneously, from this section of the Tariff for which a service order is not already pending (with the exception of Presubscription (13.3.3) which does not have the charge applied). The Miscellaneous Service Order Charge is an administrative charge designed to compensate for the expenses associated with service order issuance.

The charge always applies to the following services since a pending service order would not exist: Overtime Repair (13.2.2), Standby Repair (13.2.3), Testing and Maintenance with Other Telephone Companies other than when in conjunction with Acceptance Testing (13.2.4), Other Labor (13.2.5) and Maintenance of Service (13.3.1). The Miscellaneous Service Order Charge will also apply to the following services if they are ordered subsequent to the initial installation of the associated access service, thereby necessitating the issuance of another service order: Restoration Priority (13.3.2) and Controller Arrangement [13.3.5(A)].

The charge does not apply to the following services since there would exist a pending service order: Additional Engineering (13.1), Overtime Installation (13.2.1), Standby Acceptance Testing (13.2.3), Testing and Maintenance with Other Telephone Companies when in conjunction with Acceptance Testing (13.2.4), Additional Cooperative Acceptance Testing 13.3.4(A)(1) and Additional Automatic Testing 13.3.4(B)(1). This charge is as follows:

- Miscellaneous Service Order Charge, per occurrence $28.62

13.1 Additional Engineering

Additional Engineering will be provided by the Telephone Company at the request of the customer only when:

(A) A customer requests additional technical information after the Telephone Company has already provided the technical information normally included on the Design Layout Report (DLR) as set forth in 6.1.4 and 7.1.6 preceding.

(B) Additional engineering time is incurred by the Telephone Company to engineer a customer's request for a customized service as set forth in 7.1.2 preceding.

13. Additional Engineering, Additional Labor and Miscellaneous Services

13.1 Additional Engineering (Cont'd)

(C) A customer requests a Design Change, additional engineering time is incurred by the Telephone Company for the engineering review as set forth in 5.2.2(C). The charge for additional engineering will apply whether or not the customer authorizes the Telephone Company to proceed with the design change.

(D) When the Telephone Company determines additional engineering is required as set forth in 5.1.2(C) preceding.

The Telephone Company will notify the customer that additional engineering charges, as set forth in 13.1.1 following, will apply before any additional engineering is undertaken.

13.1.1 Charges For Additional Engineering

The charges for additional Engineering are as follows:

Additional Engineering Periods	Each Half Hour or Fraction Thereof
(A) Basic Time, normally scheduled working hours, per engineer	$20.75

13. Additional Engineering, Additional Labor and Miscellaneous Services (Cont'd)

13.1 Additional Engineering (Cont'd)

13.1.1 Charges for Additional Engineering (Cont'd)

Additional Engineering Periods	Each Half Hour or Fraction Thereof
(B) Overtime, outside of normally scheduled working hours, per engineer	$31.13

13.2 Additional Labor

Additional labor is that labor requested by the customer on a given service and agreed to by the Telephone Company as set forth in 13.2.1 through 13.2.5 following. The Telephone Company will notify the customer that additional labor charges as set forth in 13.2.6 following will apply before any additional labor is undertaken.

13.2.1 Overtime Installation

Overtime installation is that Telephone Company installation effort outside of normally scheduled working hours.

13.2.2 Overtime Repair

Overtime repair is that Telephone Company maintenance effort performed outside of normally scheduled working hours.

13.2.3 Stand by

Stand by includes all time in excess of one-half (1/2) hour during which Telephone Company personnel stand by to make installation acceptance tests or cooperative tests with a customer to verify facility repair on a given service.

13. Additional Engineering, Additional Labor and Miscellaneous Services (Cont'd)

13.2 Additional Labor (Cont'd)

13.2.4 Testing and Maintenance with Other Telephone Companies

Additional testing, maintenance or repair of facilities which connect to facilities of other telephone companies, is that which is in addition to normal effort required to test, maintain or repair facilities provided solely by the Telephone Company.

13.2.5 Other Labor

Other labor is that additional labor not included in 13.2.1 through 13.2.4 preceding and labor incurred to accommodate a specific customer request that involves only labor which is not covered by any other section of this tariff.

13.2.6 Charges for Additional Labor

The charges for additional labor are as follows:

Additional Labor Periods	Each Half Hour or Fraction Thereof
(A) Installation or Repair	
- Overtime, outside of normally scheduled working hours on a scheduled work day, per technician	$20.85*
- Premium Time, outside of scheduled work day, per technician	$27.80*

* A call-out of a Telephone Company employee at a time not consecutive with the employee's scheduled work period is subject to a minimum charge of four hours.

13. Additional Engineering, Additional Labor and Miscellaneous Services (Cont'd)

13.2 Additional Labor (Cont'd)

13.2.6 Charges for Additional Labor (Cont'd)

Additional Labor Periods	Each Half Hour or Fraction Thereof
(B) Stand by	
- Basic time, normally scheduled working hours, per technician	$13.90
- Overtime, outside of normally scheduled working hours on a scheduled work day, per technician	$20.85*
- Premium Time, outside of scheduled work day, per technician	$27.80*

* A call-out of a Telephone Company employee at a time not consecutive with the employee's scheduled work period is subject to a minimum charge of four hours.

ACCESS SERVICE

13. Additional Engineering, Additional Labor and Miscellaneous Services (Cont'd)

13.2 Additional Labor (Cont'd)

13.2.6 Charges for Additional Labor (Cont'd)

The charges for additional labor are as follows:

Additional Labor Periods	Each Half Hour or Fraction Thereof	
	Installation and Repair Technician	Central Office Equipment Technician
(C) Testing and Maintenance with other Telephone Companies, or Other Labor		
- Basic Time, normally scheduled working hours, per technician	$13.90	$13.85
- Overtime, outside of normally scheduled working hours on a scheduled work day, per technician	$20.85*	$20.78*
- Premium Time, outside of scheduled work day, per technician	$27.80*	$27.70*

* A call-out of a Telephone Company employee at a time not consecutive with the employee's scheduled work period is subject to a minimum charge of four hours.

13. Additional Engineering, Additional Labor and Miscellaneous Services (Cont'd)

13.3 Miscellaneous Services

13.3.1 Maintenance of Service

(A) When a customer reports a trouble to the Telephone Company for clearance and no trouble is found in the Telephone Company's facilities, the customer shall be responsible for payment of a Maintenance of Service charge for the period of time from when Telephone Company personnel are dispatched to the customer designated premises to when the work is completed. Failure of Telephone Company personnel to find trouble in Telephone Company facilities will result in no charge if the trouble is actually in those facilities, but not discovered at the time.

(B) The customer shall be responsible for payment of a Maintenance of Service charge when the Telephone Company dispatches personnel to the customer designated premises, and the trouble is in equipment or communications systems provided by other than the Telephone Company or in detariffed CPE provided by the Telephone Company.

In either (A) or (B) preceding, no credit allowance will be applicable for the interruption involved if the Maintenance of Service Charge applies.

(C) The charges for Maintenance of Service are as follows:

Maintenance of Service Periods	Each Half Hour or Fraction Thereof
Basic Time, Overtime* and Premium Time*	See the rates for Additional Labor as set forth in 13.2.6(C) preceding

* A call-out of a Telephone Company employee at a time not consecutive with the employee's scheduled work period is subject to a minimum charge of four hours.

ACCESS SERVICE

13. Additional Engineering, Additional Labor and Miscellaneous Services (Cont'd)

13.3 Miscellaneous Services (Cont'd)

13.3.2 Restoration Priority

The Telephone Company will arrange a Special Access Service for Restoration Priority on receipt of certification in conformance with Part 64, Subpart D, Appendix A of the Federal Communications Commission's Rules and Regulations. A charge applies when a request to provide or change a Restoration Priority is received subsequent to the issuance of an Access Order to install the service. No charge applies when a Restoration Priority is discontinued, or when ordered coincident with an access order to install service.

	Nonrecurring Charge
Restoration priority, per service arranged	$61.74

13.3.3 Presubscription

(A) Presubscription is the process by which end user customers may select and designate to the Telephone Company an IC to access, without an access code, for interLATA and intraLATA calls. This IC is referred to as the end user's predesignated IC. An end user customer may select an IC for interLATA service and an IC for intraLATA service.

The terms, conditions, rates and charges for interLATA presubscription are found in F.C.C. No. 1, Section 13.

The terms and conditions for intraLATA presubscription are following.

13. Additional Engineering, Additional Labor and Miscellaneous Services (Cont'd)

13.3 Miscellaneous Services (Cont'd)

13.3.3 Presubscription (Cont'd)

(B) End users may select one of the following options at no charge:

- designate a primary IC for all of its lines.
- designate a different IC for each of its lines.
- designate that they do not want to presubscribe to any IC.

Only one IC may be selected for each line or lines terminating in the same hunt group. End users may designate that they do not want to presubscribe to any IC. The end user must arrange this designation by directly notifying the Telephone Company's business office. This choice will require the end user to dial an access code (101XXXX) to reach an IC.

After the end user's initial selection of a predesignated IC or the designation that they do not want to presubscribe to any IC, for any change in selection after March 31, 1999, a nonrecurring charge, as set forth in 13.3.3(F) following applies.

13. Additional Engineering, Additional Labor and Miscellaneous Services (Cont'd)

13.3 Miscellaneous Services (Cont'd)

13.3.3 Presubscription (Cont'd)

(C) New end users will be asked to presubscribe to an IC at the time they place an order with the Telephone Company for Telephone Exchange Service. They may select either of the following options. There will be no charge for this initial selection.

- designate a primary IC for all of its lines.
- designate a different IC for each of its lines.
- designate that they do not want to presubscribe to any IC.

Only one IC may be selected for each individual line, or lines terminating in the same hunt group. After March 31, 1999, for any change in selection, a nonrecurring charge, as set forth in 13.3.3(F) following, applies.

13. Additional Engineering, Additional Labor and Miscellaneous Services (Cont'd)

13.3 Miscellaneous Services (Cont'd)

13.3.3 Presubscription (Cont'd)

If the new end user fails to designate an IC as its predesignated IC prior to the date of installation of Telephone Exchange Service, the Telephone Company will require the end user to dial an access code (101XXXX) to reach an IC.

For any change in selection after a nonrecurring charge, as set forth in 13.3.3(F) following applies.

(D) In the event that two or more ICs have provided to the Telephone Company notifications with the same authorization date(s), and one IC notification has already been processed by the Telephone Company, those IC notifications not yet processed would be returned to the ICs.

(E) If an IC elects to discontinue its Feature Group D Service offering prior to or within 2 years of the conversion, the IC will notify the Telephone Company of the cancellation. The IC will also notify all end users which selected them that they are cancelling their service and that they should contact the Telephone Company to select a new primary IC. The IC will also inform the end user that it will pay the presubscription change charge. The cancelling IC will then be billed by the Telephone Company the appropriate charge for each end user for a period of two years from the discontinuance of Feature Group D service.

ACCESS SERVICE

13. Additional Engineering, Additional Labor and Miscellaneous Services (Cont'd)

13.3 Miscellaneous Services (Cont'd)

13.3.3 Presubscription (Cont'd)

(F) Nonrecurring charges for presubscription are as follows:

	Nonrecurring Charge
Presubscription - per Telephone Exchange Service line or trunk	$ 4.53

Note: This charge is billed to the end user who is the subscriber to the Telephone Exchange Service.

13. Additional Engineering, Additional Labor and Miscellaneous Services (Cont'd)

13.3 Miscellaneous Services (Cont'd)

13.3.3 Presubscription (Cont'd)

(G) If an IC requests a Primary Interexchange Carrier (PIC) change on behalf of a billed party (e.g., an end user or the designator of the PIC for a pay telephone), and the billed party subsequently denies requesting the change, and the IC is unable to substantiate the change with a letter of agency signed by the billed party; then:

- The billed party will be reassigned to its previously selected IC. No charge will apply to the billed party for this reassignment.

- The nonrecurring Unauthorized PIC Change Charge, as set forth in (B) following, applies to the IC that requested the unauthorized PIC change. This charge is applied in addition to the nonrecurring Presubscription charge, as set forth in 13.3.3(F) preceding.

The nonrecurring charge for unauthorized PIC change is as follows:

Unauthorized PIC Change	Nonrecurring Charge
- Per Telephone Exchange Service line or trunk	$ 43.67

13. Additional Engineering, Additional Labor and Miscellaneous Services (Cont'd)

13.3 Miscellaneous Services (Cont'd)

13.3.4 Testing Services

Testing Services offered under this section of the tariff are optional and subject to rates and charges as set forth in 13.3.4(C) following. Other testing services, as described in 6.1.5 and 7.1.7 preceding, are provided by the Telephone Company in association with Access Services and are furnished at no additional charge.

Testing services are normally provided by Telephone Company personnel at Telephone Company locations. However, provisions are made in (A)(4) and (B)(2) following for a customer to request Telephone Company personnel to perform testing services at the customer's premises.

The offering of Testing Services under this section of the tariff is made subject to the availability of the necessary qualified personnel and test equipment at the various test locations mentioned in (A), (B) and (C) following:

(A) Switched Access Service

Testing Services for Switched Access are comprised of (a) tests which are performed during the installation of a Switched Access Service, i.e., Acceptance Tests, (b) tests which are performed after acceptance of such access services by a customer which are without charge i.e., routine resting and (c) additional tests which are performed during or after acceptance of such access services by a customer for which additional charges apply, i.e., Additional Cooperative Acceptance Tests and in-service tests.

Routine tests are those tests performed by the Telephone Company on a regular basis, as set forth in 6.1.5 preceding which are required to maintain Switched Access Service. Additional in-service tests may be done on a automatic basis

13. Additional Engineering, Additional Labor and Miscellaneous Services (Cont'd)

13.3 Miscellaneous Services (Cont'd)

13.3.4 Testing Services (Cont'd)

(A) Switched Access Service (Cont'd)

(no Telephone Company or customer technicians involved), on a manual basis [Telephone Company technician(s) involved at Telephone Company office(s) and Telephone Company or customer technician(s) involved at the customer designated premises]).

Testing services are ordered to the Dial Tone Office for FGA, to the access tandem or end office for FGB (wherever the FGB service is ordered) and to the end office for FG's C and D. Testing Services for Directory Assistance Service not routed through an access tandem is ordered to a Directory Assistance Location for each NPA.

(1) Additional Cooperative Acceptance Testing (ACAT)

Additional Cooperative Acceptance Testing of Switched Access Service involves the Telephone Company provision of a technician at its office(s) and the customer provision of a technician at its premises, with suitable test equipment to perform the required tests.

Additional Cooperative Acceptance Tests may, for example, consist of the following tests:

- Impulse Noise
- Phase Jitter
- Signal to C-Notched Noise Ratio
- Intermodulation (Nonlinear) Distortion
- Frequency Shift (Offset)
- Envelope Delay Distortion
- Dial Pulse Percent Break

(2) Additional Automatic Testing

Additional Automatic Testing (AAT) of Switched Access Services (Feature Groups, B, C and D), is a service where the customer

13. Additional Engineering, Additional Labor and Miscellaneous Services (Cont'd)

13.3 Miscellaneous Services (Cont'd)

13.3.4 Testing Services (Cont'd)

(A) Switched Access Service (Cont'd)

(2) Additional Automatic Testing (Cont'd)

provides remote office test lines and 105 test lines with associated responders or their functional equivalent. The customer may order, at additional charges, gain-slope and C-notched noise testing and may order the routine tests (1004 Hz loss, C-Message Noise and Balance) on an as needed or more than routine schedule.

The Telephone Company will provide an AAT report that lists the test results for each trunk tested. Trunk test failures requiring customer participation for trouble resolution will be provided to the customer on a as-occurs basis.

13. Additional Engineering, Additional Labor and Miscellaneous Services (Cont'd)
13.3 Miscellaneous Services (Cont'd)

13.3.4 Testing Services (Cont'd)

(A) Switched Access Service (Cont'd)

(3) Additional Manual Testing

Additional Manual Testing (AMT) of Switched Access Services (Feature Groups A, B, C, and D and Directory Access Service not routed through an access tandem), where the Telephone Company provides a technician at its office(s) and the Telephone Company or customer provides a technician at the customer designated premises, with suitable test equipment to perform the required tests, will normally consist of gain-slope and C-notched noise testing. However, the Telephone Company will conduct any additional tests which the IC may request.

The Telephone Company will provide an AMT report listing the test results for each trunk tested. Trunk test failures requiring customer participation for trouble resolution will be provided to the customer on a per occurrence basis.

13. Additional Engineering, Additional Labor and Miscellaneous Services (Cont'd)
13.3 Miscellaneous Services (Cont'd)

13.3.4 Testing Services (Cont'd)

(A) Switched Access Service (Cont'd)

(4) Obligations of the Customer

(a) The customer shall provide the Remote Office Test Line priming data to the Telephone Company, as appropriate, to support routine testing as set forth in 6.1.5(B) preceding or AAT as set forth in 13.3.4(A)(2) preceding.

(b) The customer shall make the facilities to be tested available to the Telephone Company at times mutually agreed upon.

13. Additional Engineering, Additional Labor and Miscellaneous Services (Cont'd)

13.3 Miscellaneous Services (Cont'd)

13.3.4 Testing Services (Cont'd)

(B) Special Access Service

The Telephone Company will provide assistance in performing specific tests requested by the customer.

(1) Additional Cooperative Acceptance Testing (ACAT)

When a customer provides a technician at its premises or at an end user's premises, with suitable test equipment to perform the requested tests, the Telephone Company will provide a technician at its office for the purpose of conducting Additional Cooperative Acceptance Testing on Voice Grade Services. At the customer's request, the Telephone Company will provide a technician at the customers premises or at the end user premises. These tests may, for example, consist of the following:

- Attenuation Distortion (i.e., frequency response)
- Intermodulation Distortion (i.e., harmonic distortion)
- Phase Jitter
- Impulse Noise
- Envelope Delay Distortion
- Echo Control
- Frequency Shift

(2) Additional Manual Testing

The Telephone Company will provide a technician at its premises, and the Telephone Company or customer will provide a technician at the customer's designated premises with suitable test equipment to perform the requested tests.

13. Additional Engineering, Additional Labor and Miscellaneous Services (Cont'd)

13.3 Miscellaneous Services (Cont'd)

13.3.4 Testing Services (Cont'd)

(B) Special Access Service (Cont'd)

(3) Obligation of the Customer

When the customer subscribes to Testing Service as set forth in this section, the customer shall make the facilities to be tested available to the Telephone Company at times mutually agreed upon.

(C) Rates and Charges

(1) Switched Access

(a) Additional Cooperative Acceptance Testing

Testing Periods	Each Half Hour or Fraction Thereof
Basic Time, Overtime* and Premium Time*	See the rates for Additional Labor set forth in 13.2.6(C) preceding.

*A call-out of a Telephone Company employee at a time not consecutive with the employee's schedule work period is subject to a minimum charge of four hours.

13. Additional Engineering, Additional Labor and Miscellaneous Services (Cont'd)

13.3 Miscellaneous Services (Cont'd)

13.3.4 Testing Services (Cont'd)

(C) Rates and Charges (Cont'd)

(1) Switched Access (Cont'd)

(b) Additional Automatic Testing (AAT)

The Additional Tests as set forth following may be ordered by the customer, at additional charges, 60 days prior to the start of the customer prescribed schedule.

To First Point of Switching

Additional Tests

	Per Test Per Transmission Path
Gain-Slope Tests	$2.90
C-Notched Noise Tests	$2.90
1004 Hz Loss*	$2.90
C-Messages Noise*	$2.90
Balance (return loss)*	$2.90

* 1004 Hz Loss, C-Message Noise and Balance are non-chargeable routine tests, however, they may be required on an as needed or more than routine schedule basis, in which case the charges herein apply.

13. Additional Engineering, Additional Labor and Miscellaneous Services (Cont'd)

13.3 Miscellaneous Services (Cont'd)

13.3.4 Testing Services (Cont'd)

(C) Rates and Charges (Cont'd)

(1) Switched Access (Cont'd)

(c) Additional Manual Testing

The Additional Tests as set forth following may be ordered by the customer, at additional charges, 60 days prior to the start of the testing schedule as mutually agreed to by the customer and the Telephone Company.

To First Point of Switching

Additional Tests

	Each Half Hour or Fraction Thereof
Gain-Slope, C-Notched Noise other agreed to tests, per technician	See the rates for and any Additional Labor as set forth in 13.2.6(C) preceding

ACCESS SERVICE

13. Additional Engineering, Additional Labor and Miscellaneous Services (Cont'd)
13.3 Miscellaneous Services (Cont'd)

13.3.4 Testing Services (Cont'd)

(C) Rates and Charges (Cont'd)

(2) Special Access

(a) Additional Cooperative Acceptance Testing (ACAT)

Testing Periods	Each Half Hour or Fraction Thereof
Basic Time, Overtime* and Premium Time*	See the rates for Additional Labor set forth in 13.2.6(C) preceding.

*A call-out of a Telephone Company employee at a time not consecutive with the employee's scheduled work period is subject to a minimum charge of four hours.

ACCESS SERVICE

13. Additional Engineering, Additional Labor and Miscellaneous Services (Cont'd)

13.3 Miscellaneous Services (Cont'd)

13.3.4 Testing Services (Cont'd)

(C) Rates and Charges (Cont'd)

(2) Special Access (Cont'd)

(b) Additional Manual Cooperative and Additional Manual Testing

Testing Periods	Each Half Hour or Fraction Thereof
Basic Time, Overtime* and Premium Time*	See the rates for Additional Labor set forth in 13.2.6(C) preceding.

*A call-out of a Telephone Company employee at a time not consecutive with the employee's scheduled work period is subject to a minimum charge of four hours.

13. Additional Engineering, Additional Labor and Miscellaneous Services (Cont'd)

13.3 Miscellaneous Services (Cont'd)

13.3.5 Miscellaneous Equipment

(A) Controller Arrangements

This arrangement enables the customer to control up to 48 transfer functions at a Telephone Company central office via a remote keyboard terminal capable of either 300 or 1200 bps operation. Included as part of the Controller Arrangement is a dial-up data station located at the Telephone Company Central Office to provide access to the Controller Arrangement. This dial-up data station consists of a 212A DATAPHONE data set and an appropriate Telephone Company provided channel.

The Controller Arrangement must be located in the same Telephone Company central office as the transfer functions which it controls.

	Monthly Rate
- Per arrangement	$94.65

13. Additional Engineering, Additional Labor and Miscellaneous Services (Cont'd)

13.3 Miscellaneous Services (Cont'd)

13.3.6 Telecommunications Service Priority (TSP) System

(A) Description of the Service

The TSP system is a service that provides for the priority provisioning and/or restoration of National Security Emergency Preparedness (NSEP) Telecommunications services. The TSP system applies only to NSEP services, includes all Access Services and provides the Telephone Company with a guide to the sequence in which services are to be provisioned and/or restored.

All facilities that can be identified by a unique circuit identifier, can be provisioned for TSP service by the Telephone Company.

The minimum period for restoration priority service is one month.

The rates and charges associated with a customer subscribing to TSP service are as specified in Section 13.3.6(G)(1).

(B) Obtaining TSP Service

The Executive Office of the President is empowered with the authority to receive, evaluate and process requests for NSEP TSP services. The executive Office of the President, through the TSP Program office as its administrative branch, makes the priority level assignments and issues the TSP authorization code reflecting the priority assignment associated with a request. The customer initiates the request for TSP service from the TSP Program office through an agency of the federal government. The customer provides the TSP authorization code, in addition to all the other details necessary to complete the order (ASR), and submits to the Telephone Company for appropriate action.

13. Additional Engineering, Additional Labor and Miscellaneous Services (Cont'd)

13.3 Miscellaneous Services (Cont'd)

13.3.6 Telecommunications Service Priority (TSP) System (Cont'd)

(B) Obtaining TSP Service (Cont'd)

The TSP authorization code, assigned on a per service basis, consists of a 12-character field, a nine-character control ID followed by a dash and a two-character field specifying the priority level assignment. Its structure is as follows:

TSPxxxxxn-yy

The "x"s contain a sequence number unique to each TSP authorization code and the "n" is a one character alpha numeric check digit. The first "y" is the provisioning priority level assignment. The second "y" is the restoration priority level assignment.

(C) Provisioning Priority

If the customer requires service within a shorter time interval than the Telephone Company can provide, and the requested service qualifies for NSEP, the customer may elect to invoke NSEP treatment and obtain the appropriate provisioning priority assignment from the TSP Program office. Accept able assignment code values are: E, 1, 2, 3, 4, 5 or 0.

The assignment of the value "E" implies the service has the most critical provisioning requirements and the Telephone Company will treat accordingly. The Telephone Company will take immediate action to provide the requested service at the earliest possible date. Rates and charges associated with "E" provisioning are as specified in Section 13.2.

The assignment values of 1, 2, 3, 4 and 5 are treated as essential service priorities and the Company will adjust its available resources to meet the customer's requested due date. Rates and charges associated with invoking this priority treatment are specified in Section 13.2. The value "0" implies no provisioning priority.

13. Additional Engineering, Additional Labor and Miscellaneous Services (Cont'd)

13.3 Miscellaneous Services (Cont'd)

13.3.6 Telecommunications Service Priority (TSP) System (Cont'd)

(D) Restoration Priority

By obtaining a TSP authorization code for restoration priority, the service is classified as being among the nation's most important NSEP telecommunication services. The Company will restore these services before service without restoration priority assignments in the order of priority assignments. Acceptable values are 1, 2, 3, 4, 5 or 0 with the value "1" being the highest priority.

When the Company recognizes a TSP as being out of service, unusable or upon receipt of a trouble report, available resources will be dispatched to restore the service as quickly as practicable. A priority value of 1, 2 or 3 requires dispatch outside normal business hours if necessary to restore the service. A priority value of 4 or 5 only requires dispatch outside of normal business hours if the next business day is more than 24 hours away. If the value "0" has been assigned, then no restoration priority is applicable to this service.

(E) General Customer Obligations

(1) In all instances, the customer is responsible for obtaining the appropriate TSP authorization code and providing that code to the Telephone Company. The code may be submitted verbally and the Telephone Company will accept such verbal notification, however, the customer must submit written confirmation to the Telephone Company within two working days. If written confirmation is not received within two working days, all applicable rates and charges become immediately due and payable and the requested TSP priority is revoked.

(2) The customer for TSP service must be the same customer for the Access Service with which it is associated.

(3) All points of a multipoint service configuration must have the same restoration priority assignment and must satisfy the requirements of that assignment.

13. Additional Engineering, Additional Labor and Miscellaneous Services (Cont'd)

13.3 Miscellaneous Services (Cont'd)

13.3.6 Telecommunications Service Priority (TSP) System (Cont'd)

(E) General Customer Obligations (Cont'd)

(4) In obtaining TSP service, the customer consents to the release of certain information by the Telephone Company to the TSP Program Office in order to maintain and administer the TSP System. Such information includes: the customer's name, telephone number and mailing address, the TSP authorization code and the circuit or service ID number associated with the TSP service.

(5) When NSEP treatment is invoked, the Telephone Company will first attempt to notify the customer. If the Telephone Company is not able to notify the customer, then the customer recognizes that quoting charges and obtaining permission beforehand will cause unnecessary delays and, as a result, grants the Telephone Company the right to quote charges after provisioning of the service.

(6) The customer must request and justify revalidation of all priority level assignments at least every three years.

(F) General Company Obligations

(1) The Telephone Company will provision and/or restore service having TSP authorization codes before other services, with the exception of official Company services necessary for provisioning and/or restoring the services of the carrier.

(2) The Telephone Company will work TSP services in the order of their priority level assignments. The priority sequence is as follows:

- Restore TSP services assigned restoration priority 1
- Provision Emergency (E) TSP services
- Restore TSP services assigned restoration priority 2, 3, 4 or 5.
- Provision TSP services assigned provisioning priority 1, 2, 3, 4 or 5.

13. Additional Engineering, Additional Labor and Miscellaneous Services (Cont'd)

13.3 Miscellaneous Services (Cont'd)

13.3.6 Telecommunications Service Priority (TSP) System (Cont'd)

(F) General Company Obligations (Cont'd)

(3) Work cooperatively with other providers of NSEP service when only a portion is provided by the Telephone Company to ensure "end-to-end" service.

(G) Rates and Charges

The following rates and charges are in addition to all other rates and charges that may apply for other services offered under this tariff which operate in conjunction with the TSP System.

(1) Establishment of TSP Service

The nonrecurring charge (NRC) specified below applies when Access Service is ordered with provisioning and/or restoration priority. If both are ordered at the same time, only one NRC is applicable. The specified NRC is also applicable for orders specifying priority changes. The monthly rate is associated with only the administration and maintenance of the TSP System for restoration priority service.

	Monthly Rate	Nonrecurring Charge
TSP Services, Per Circuit	0.00	$80.63

(2) Priority Provisioning

There are two basic levels of priority provisioning, Emergency (provisioning priority "E") and Essential (provisioning priority 1, 2, 3, 4 or 5).

(a) Emergency provisioning. The Telephone Company will take immediate action to provide the requested service at the earliest possible date. The rates and charges will apply as set forth in Section 13.2.

13. Additional Engineering, Additional Labor and Miscellaneous Services (Cont'd)

13.3 Miscellaneous Services (Cont'd)

13.3.6 Telecommunications Service Priority (TSP) System (Cont'd)

(G) Rates and Charges (Cont'd)

(2) Priority Provisioning (Cont'd)

(b) Essential provisioning. The Telephone Company will adjust its available resources to meet the customers requested due date. The rates and charges will apply as set forth in Section 13.2, Additional Labor. To calculate the Additional Labor charges, the Telephone Company will keep track of the additional labor hours used to meet the request of the customer and bill the customer at the applicable Additional Labor charges.

ACCESS SERVICE

14. Exceptions to Access Service Offerings

The services offered under the provisions of this tariff are subject to availability as set forth in 2.1.4 preceding. In addition, the following exceptions apply:

(Paragraphs 14.1 through 14.5 following are reserved for future listings as a result of a subsequent survey. In the meantime, in planning an end-to-end service, the customer should contact the Telephone Company in each customer premises city to assure itself that all of the service or service components required for a given customer service are currently available.)

14.1 The following service(s) is (are) no offered in the operating territory of listed Issuing Carriers.

(Reserved for future use.)

14.2 The following offering(s) is (are) limited to existing locations. No inside moves, rearrangements or additions will be permitted.

(Reserve for future use.)

14.3 The following offering(s) is (are) limited to existing locations. Inside moves or rearrangements may be undertaken. However, no additions will be permitted.

14.4 The following offering(s) is (are) limited to existing locations where additional units may be added for growth. Inside moves or rearrangements may be undertaken.

(Reserved for future use.)

14.5 The following offering(s) is (are) limited to existing locations where additional units may be added for growth. However inside moves or rearrangements will not be permitted.

(Reserved for future use.)

15. Interface Groups, Transmission Specifications and Channel Interfaces

15.1 Local Transport Interface Groups

Interface Group 1 is provided with Type C Transmission Specifications, and Interface Groups 2 through 10 are provided with Type A or B Transmission Specifications, depending on the Feature Group and whether the Access Service is routed directly or through an access tandem. All Interface Groups are provided with Data Transmission Parameters.

Only certain premises interfaces are available at the customer designated premises. The premises interfaces associated with the Interface Groups may vary among Feature Groups. The various premises interfaces which are available with the Interface Groups, and the Feature Groups with which they may be used, are set forth in 15.1.1 following:

15.1.1 Interface Group 1

Interface Group 1, except as set forth in the following, provides two-wire voice frequency transmission at the point of termination at the customer's premises. The interface is capable of transmission of voice and associated telephone signals within the frequency bandwidth of approximately 300 to 3000 Hz.

Interface Group 1 is not provided in association with FGC and FGD when the first point of switching is an access tandem. In addition, Interface Group 1 is not provided in association with FGB, FGC or FGD when the first point of switching provides only four-wire terminations.

The transmission path between the point of termination at the customer designated premises and the customer's serving wire center may be comprised of any form or configuration of plant capable of and typically used in the telecommunications industry for the transmission of voice and associated telephone signals within the frequency bandwidth of 300 to 3000 Hz.

The interface is provided with loop supervisory signaling. When the interface is associated with FGA, such signaling will be loop start or ground start signaling. When the interface is associated with FGB, FGC or FGD, such signaling, except for two-way calling which is E & M signaling, will be reverse battery signaling.

15. Interface Groups, Transmission Specifications and Channel Interfaces (Cont'd)

15.1 Local Transport Interface Groups (Cont'd)

15.1.2 Interface Group 2

Interface Group 2 provides four-wire voice frequency transmission at the point of termination at the customer designated premises. The interface is capable of transmission of voice and associated telephone signals within the frequency bandwidth of approximately 300 to 3000 Hz.

The transmission path between the point of termination at the customer designated premises and the customer's serving wire center may be comprised of any form or configuration of plant capable of and typically used in the telecommunications industry for the transmission of voice and associated telephone signals within the frequency bandwidth of approximately 300 to 3000 Hz.

The interface is provided with loop supervisory signaling. When the interface is associated with FGA, such signaling will be loop start or ground start signaling. When the interface is associated with FGB, FGC or FGD, such signaling, except for two-way calling which is E&M signaling, will be reverse battery signaling.

15.1.3 Interface Group 3

Interface Group 3 provides group level analog transmission at the point of termination at the customer designated premises. The interface is capable of transmitting electrical signals between the frequencies of 60 to 108 kHz, with the capability to channelize up to 12 voice frequency transmission paths. Certain frequencies within the bandwidth of the Interface Group are reserved for Telephone Company use, e.g., pilot and carrier group alert tones. Before the first point of switching, the Telephone Company will provide multiplex equipment to derive 12 transmission paths of frequency bandwidth of approximately 300 to 3000 Hz.

The interface is provided with individual transmission path SF supervisory signaling.

15. Interface Groups, Transmission Specifications and Channel Interfaces (Cont'd)

15.1 Local Transport Interface Groups (Cont'd)

15.1.4 Interface Group 4

Interface Group 4 provides supergroup level analog transmission at the point of termination at the customer designated premises. The interface is capable of transmitting electrical signals between the frequencies of 312 to 552 kHz, with the capability to channelize up to 60 voice frequency transmission paths. Certain frequencies within the bandwidth of the Interface Group are reserved for Telephone Company use, e.g., pilot and carrier group alarm tones. Before the first point of switching, the Telephone Company will provide multiplex and channel bank equipment to derive 60 transmission paths of frequency bandwidth of approximately 300 to 3000 Hz.

The interface is provided with individual transmission path SF supervisory signaling.

15.1.5 Interface Group 5

Interface Group 5 provides mastergroup level analog transmission at the point of termination at the customer designated premises. The interface is capable of transmitting electrical signals between the frequencies of 564 to 3084 kHz, with the capability to channelize up to 600 voice frequency transmission paths. Certain frequencies within the bandwidth of the Interface Group are reserved for Telephone Company use, e.g., pilot and carrier group alarm tones. Before the first point of switching, the Telephone Company will provide multiplex and channel bank equipment to derive 600 transmission paths of frequency bandwidth of approximately 300 to 3000 Hz.

The interface is provided with individual transmission path SF supervisor signaling.

15.1.6 Interface Group 6

Interface Group 6 provides DS1 level digital transmission at the point of termination at the customer designated premises. The interface is capable of transmitting electrical signals at a nominal 1.544

15. Interface Groups, Transmission Specifications and Channel Interfaces (Cont'd)

15.1 Local Transport Interface Groups (Cont'd)

15.1.6 Interface Group 6 (Cont'd)

Mbps, with the capability to channelize up to 24 voice frequency transmission paths. Before the first point of switching, when analog switching utilizing analog terminations are provided, the Telephone Company will provide multiplex and channel bank equipment to derive 24 transmission paths of a frequency bandwidth of approximately 300 to 3000 Hz. When digital switching or analog switching with digital carrier terminations is provided, the Telephone Company will provide a DS1 signal in D3/D4 format.

The interface is provided with individual transmission path bit stream supervisory signaling.

15.1.7 Interface Group 7

Interface Group 7 provides DS1C level digital transmission at the point of termination at the customer designated premises. The interface is capable of transmitting electrical signals at a nominal 3.152 Mbps, with the capability to channelize up to 48 voice frequency transmission paths. Before the first point of switching, when analog switching utilizing analog terminations is provided, the Telephone Company will provide multiplex and channel bank equipment to derive up to 48 voice frequency transmission paths of a frequency bandwidth of approximately 300 to 3000 Hz. When digital switching or analog switching with digital carrier terminations is provided, the Telephone Company will provide DS1 signals in D3/D4 format.

The interface is provided with individual transmission path bit stream supervisor signaling.

15.1.8 Interface Group 8

Interface Group 8 provides DS2 level digital transmission at the point of termination at the customer designated premises. The interface is capable of transmitting electrical signals at a nominal 6.312 Mbps, with the capability to channelize up to

15. Interface Groups, Transmission Specifications and Channel Interfaces (Cont'd)

15.1 Local Transport Interface Groups (Cont'd)

15.1.8 Interface Group 8 (Cont'd)

96 voice frequency transmission paths. Before the first point of switching, when analog switching utilizing analog terminations are provided, the Telephone Company will provide multiplex and channel bank equipment in its office to derive up to 96 transmission paths of a frequency bandwidth of approximately 300 to 3000 Hz. When digital switching, or analog switching with digital carrier terminations is provided, the Telephone Company will provide a DS1 signal in D3/D4 format.

The interface is provided with individual transmission path bit stream supervisory signaling.

15.1.9 Interface Group 9

Interface Group 9 provides DS3 level digital transmission at the point of termination at the customer designated premises. The interface is capable of transmitting electrical signals at a nominal 44.736 Mbps, with the capability to channelize up to 672 voice frequency transmission paths. Before the first point of switching, when analog switching utilizing analog terminations is provided, the Telephone Company will provide multiplex and channel bank equipment to derive up to 672 transmission paths of a frequency bandwidth of approximately 300 to 3000 Hz. When digital switching, or analog switching with digital carrier terminations is provided, the Telephone Company will provide DS1 signals in D3/D4 format.

The interface is provided with individual transmission path bit stream supervisor signaling.

15. Interface Groups, Transmission Specifications and Channel Interfaces (Cont'd)

15.1 Local Transport Interface Groups (Cont'd)

15.1.10 Interface Group 10

Interface Group 10 provides DS4 level digital transmission at the point of termination at the customer designated premises. The interface is capable of transmitting electrical signals at a nominal 274.176 Mbps, with the capability to channelize up to 4032 voice frequency transmission paths. Before the first point of switching, when analog switching utilizing analog terminations is provided, the Telephone Company will provide multiplex and channel bank equipment to derive up to 4032 transmission paths of a frequency bandwidth of approximately 300 to 3000 Hz. When digital switching, or analog switching with digital carrier terminations is provided, the Telephone Company will provide DS1 signals in D3/D4 format. The interface is provided with individual transmission path bit stream supervisor signaling.

15.1.11 Available Premises Interface Codes

Following is a matrix showing, for each Interface Group, which premises interface codes are available as a function of the Telephone Company switch supervisory signaling and Feature Group. For explanation of these codes, see the Glossary of Channel Interface Codes in 15.3 following.

15. Interface Groups, Transmission Specifications and Channel Interfaces (Cont'd)

15.1 Local Transport Interface Groups (Cont'd)

15.1.11 Available Premises Interface Codes (Cont'd)

Interface Group	Telephone Company Switch Supervisory Signaling	Premises Interface Code	Feature Group A	B	C	D
1	LO	2LS2	X			
	LO	2LS3	X			
	GO	2GS2	X			
	GO	2GS3	X			
	LO, GO,	2DX3	X			
	LO, GO,	4EA3-E	X			
	LO, GO	4EA3-M	X			
	LO, GO	6EB3-E	X			
	LO, GO	6EB3-M	X			
	RV, EA, EB, EC	2DX3		X	X	X
	RV, EA, EB, EC	4EA3-E		X	X	X
	RV, EA, EB, EC	4EA3-M		X	X	X
	RV, EA, EB, EC	6EB3-E		X	X	X
	RV, EA, EB, EC	6EB3-M		X	X	X
	EA, EB, EC	6EC3			X	X
	RV	2RV3-0		X	X	X
	RV	2RV3-T		X	X	X
	SS7	2N02			X	X
2	LO, GO	4SF2	X			
	LO, GO	4SF3	X			
	LO	4LS2	X			
	LO	4LS3	X			
	LO	6LS2	X			
	GO	4GS2	X			
	GO	4GS3	X			
	GO	6GS2	X			
	LO, GO	4DX2	X			
	LO, GO	4DX3	X			
	LO, GO	6EA2-E	X			
	LO, GO	6EA2-M	X			
	LO, GO	8EB2-E	X			
	LO, GO	8EB2-M	X			
	LO, GO	6EX2-B	X			

15. Interface Groups, Transmission Specifications and Channel Interfaces (Cont'd)

15.1 Local Transport Interface Groups (Cont'd)

15.1.11 Available Premises Interface Codes (Cont'd)

Interface Group	Telephone Company Switch Supervisory Signaling	Premises Interface Code	Feature Group A	B	C	D
2 (Cont'd)	RV, EA, EB, EC	4SF2		X	X	X
	RV, EA, EB, EC	4SF3		X		
	RV, EA, EB, EC	4DX2		X	X	X
	RV, EA, EB, EC	4DX3		X		
	RV, EA, EB, EC	6DX2			X	
	RV, EA, EB, EC	6EA2-E		X	X	X
	RV, EA, EB, EC	6EA2-M		X	X	X
	RV, EA, EB, EC	8EB2-E		X	X	X
	RV, EA, EB, EC	8EB2-M		X	X	X
	EA, EB, EC	8EC2-M			X	X
	RV	4RV2-O		X	X	X
	RV	4RV2-T		X	X	X
	RV	4RV3-O		X	X	
	RV	4RV3-T		X	X	
	SS7	4N02			X	X
3	LO, GO	4AH5-B	X			
	RV, EA, EB, EC	4AH5-B		X	X	X
	SS7	4AH5-B			X	X
4	LO, GO	4AH6-C	X			
	RV, EA, EB, EC	4AH6-C		X	X	X
	SS7	4AH6-C			X	X
5	LO, GO	4AH6-D	X			
	RV, EA, EB, EC	4AH6-D		X	X	X
	SS7	4AH6-D			X	X
6	LO, GO	4DS9-15	X			
	LO, GO	4DS9-15L	X			
	RV, EA, EB, EC	4DS9-15		X	X	X
	RV, EA, EB, EC	4DS9-15L		X	X	X
	SS7	4DS9-15			X	X
7	LO, GO	4DS9-31	X			
	RV, EA, EB, EC	4DS9-31		X	X	X
	LO, GO	4DS9-31L	X			
	RV, EA, EB, EC	4DS9-31L		X	X	X
	SS7	4DS9-31			X	X

15. Interface Groups, Transmission Specifications and Channel Interfaces (Cont'd)

15.1 Local Transport Interface Groups (Cont'd)

15.1.11 Available Premises Interface Codes (Cont'd)

Interface Group	Telephone Company Switch Supervisory Signaling	Premises Interface Code	Feature Group A	B	C	D
8	LO, GO	4DS0-63	X			
	LO, GO	4DS0-63L	X			
	RV, EA, EB, EC	4DS0-63		X	X	X
	RV, EA, EB, EC	4DS0-63L		X	X	X
	SS7	4DS0-63			X	X
9	LO, GO	4DS6-44	X			
	LO, GO	4DS6-44L	X			
	RV, EA, EB, EC	4DS6-44		X	X	X
	RV, EA, EB, EC	4DS6-44L		X	X	X
	SS7	4DS6-44			X	X
10	LO, GO	4DS6-27	X			
	LO, GO	4DS6-27L	X			
	RV, EA, EB, EC	4DS6-27		X	X	X
	RV, EA, EB, EC	4DS6-27L		X	X	X
	SS7	4DS6-27			X	X

15.1.12 Supervisory Signaling

- For Interface Groups 1 and 2

  DX Supervisory Signaling,
  E&M Type I Supervisory Signaling,
  E&M Type II Supervisory Signaling, or
  E&M Type III Supervisory Signaling

- For Interface Group 2

  SF Supervisor Signaling, or
  Tandem Supervisory Signaling

- For Interface Groups 6 through 10

  These Interface Groups may, at the option of the customer, be provided with individual transmission path SF supervisory signaling where such signaling is available in Telephone Company central offices. Generally such signaling is available only where the entry switch provides an analog, i.e., non digital, interface to the transport termination.

15. Interface Groups, Transmission Specifications and Channel Interfaces (Cont'd)

15.2 Transmission Specifications Switched Access Service

15.2.1 Standard Transmission Specifications

Following are descriptions of the three Standard Transmission Specifications available with Switched Access Service Feature Groups. The specific applications in terms of the Feature Groups and Interface Groups with which the Feature Group Standard Transmission Specifications are provided are set forth in 6.2.1(C), 6.2.2(C), 6.2.3(C) and 6.2.4(C) preceding.

(A) Type A Transmission Specifications

Type A Transmission Specifications is provided with the following parameters:

(1) Loss Deviation

The maximum Loss Deviation of the 1004 Hz loss relative to the Expected Measured Loss (EML) is ± 2.0 dB.

(2) Attenuation Distortion

The maximum Attenuation Distortion in the 404 to 2804 Hz frequency band relative to the loss of 1004 Hz is -1.0 dB to +3.0 dB.

(3) C-Message Noise

The maximum C-Message Noise for the transmission path at the route miles listed is less than or equal to:

Route Miles	C-Message Noise
Less than 50	32 dBrnCO
51 to 100	34 dBrnCO
101 to 200	37 dBrnCO
201 to 400	40 dBrnCO
401 to 1000	42 dBrnCO

15. Interface Groups, Transmission Specifications and Channel Interfaces (Cont'd)

15.2 Transmission Specifications Switched Access Service (Cont'd)

15.2.1 Standard Transmission Specifications (Cont'd)

(A) Type A Transmission Specifications (Cont'd)

(4) C-Notch Noise

The maximum C-Notch Noise, utilizing a -16 dBmO holding tone, is less than or equal to 45 dBrnCO.

(5) Echo Control

Echo Control, identified as Equal Level Echo Path Loss, and expressed as Echo Return Loss and Singing Return Loss, is dependent on the routing, i.e., whether the service is routed directly from the customer's point of termination (POT) to the end office or via an access tandem. It is equal to or greater than the following:

	Echo Return Loss	Singing Return Loss
POT to Access Tandem	21 dB	14 dB
POT to End Office		
- Direct	N/A	N/A
- Via Access Tandem	16 dB	11 dB

(6) Standard Return Loss

Standard Return Loss expressed as Echo Return Loss and Singing Return Loss on two-wire ports of a four-wire point of termination shall be equal to or greater than:

Echo Return Loss	Singing Return Loss
5 dB	2.5 dB

(B) Type B Transmission Specifications

Type B Transmission Specifications are provided with the following parameters:

15. Interface Groups, Transmission Specifications and Channel Interfaces (Cont'd)

15.2 Transmission Specifications Switched Access Service (Cont'd)

15.2.1 Standard Transmission Specifications (Cont'd)

(B) Type B Transmission Specifications (Cont'd)

(1) Loss Deviation

The maximum Loss Deviation of the 1004 Hz loss relative to the Expected Measured Loss (EML) is ± 2.5 dB.

(2) Attenuation Distortion

The maximum Attenuation Distortion in the 404 to 2804 Hz frequency band relative to loss at 1004 Hz is -2.0 dB to +4.0 dB.

(3) C-Message Noise

The maximum C-Message Noise for the transmission path at the route miles listed is less than or equal to:

Route Miles	C-Message Noise* Type B1	Type B2
Less than 50	32 dBrnCO	35 dBrnCO
51 to 100	33 dBrnCO	37 dBrnCO
101 to 200	35 dBrnCO	40 dBrnCO
201 to 400	37 dBrnCO	43 dBrnCO
401 to 1000	39 dBrnCO	45 dBrnCO

(4) C-Notch Noise

The maximum C-Notch Noise, utilizing a -16 dBmO holding tone is less than or equal to 47 dBrnCO.

*For Feature Groups C and D only Type B2 will be provided. For Feature Groups A and B, Type B1 or B2 will be provided as set forth in Technical Reference PUB 62500.

15. Interface Groups, Transmission Specifications and Channel Interfaces (Cont'd)

15.2 Transmission Specifications Switched Access Service (Cont'd)

15.2.1 Standard Transmission Specifications (Cont'd)

(B) Type B Transmission Specifications (Cont'd)

(5) Echo Control

Echo Control, identified as Impedance Balance for FGA and FGB and Equal Level Echo Path Loss for FGC and FGD, and expressed as Echo Return Loss (ERL) and Singing Return Loss (SRL), is dependent on the routing, i.e., whether the service is routed directly from the customer's point of termination (POT) to the end office or via an access tandem. The ERL and SRL also differ by Feature Group, type of termination, and type of transmission path. They are greater than or equal to the following:

	Echo Return Loss	Singing Return Loss
POT to Access Tandem		
- Terminated in 4-Wire trunk	21 dB	14 dB
- Terminated in 2-Wire trunk	16 dB	11 dB
POT to End Office		
- Direct	16 dB	11 dB
- Via Access Tandem		
. For FGB access	8 dB	4 dB
. For FGC access (Effective 4-Wire transmission path at end office)	16 dB	11 dB
. For FGC access (Effective 2-Wire transmission path at end office)	13 dB	6 dB

15. Interface Groups, Transmission Specifications and Channel Interfaces (Cont'd)

15.2 Transmission Specifications Switched Access Service (Cont'd)

15.2.1 Standard Transmission Specifications (Cont'd)

(B) Type B Transmission Specifications (Cont'd)

(6) Standard Return Loss

Standard Return Loss, expressed as Echo Return Loss and Singing Return Loss, on two-wire ports of a four-wire point of termination shall be equal to or greater than:

Echo Return Loss	Singing Return Loss
5 dB	2.5 dB

(C) Type C Transmission Specifications

Type C Transmission Specifications are provided with the following parameters:

(1) Loss Deviation

The maximum Loss Deviation of the 1004 Hz loss relative to the Expected Measured Loss (EML) is ± 3.0 dB.

(2) Attenuation Distortion

The maximum Attenuation Distortion in the 404 to 2804 Hz frequency band relative to loss at 1004 Hz is -2.0 dB to +5.5 dB.

(3) C-Message Noise

The maximum C-Message Noise for the transmission path at the route miles listed is less than or equal to:

15. Interface Groups, Transmission Specifications and Channel Interfaces (Cont'd)

15.2 Transmission Specifications Switched Access Service (Cont'd)

15.2.1 Standard Transmission Specifications (Cont'd)

(C) Type C Transmission Specifications (Cont'd)

Route Miles	C-Message Noise* Type C1	Type C2
Less than 50	32 dBrnCO	38 dBrnCO
51 to 100	33 dBrnCO	39 dBrnCO
101 to 200	35 dBrnCO	41 dBrnCO
201 to 400	37 dBrnCO	43 dBrnCO
401 to 1000	39 dBrnCO	45 dBrnCO

(4) C-Notch Noise

The maximum C-Notch Noise, utilizing a -16 dBmO holding tone is less than or equal to 47 dBrnCO.

(5) Echo Control

Echo Control, identified as Return Loss and expressed as Echo Return Loss and Singing Return Loss is dependent on the routing, i.e., whether the service is routed directly from the customer's point of termination (POT) to the end office or via an access tandem. It is equal to or greater than the following:

	Echo Return Loss		Singing Return Loss
POT to Access Tandem	13 dB	6 dB	
POT to End Office			
- Direct	13 dB	6 dB	
- Via Access Tandem	8 dB	4 dB	(for FGB only)

For Feature Groups C and D only Type C2 will be provided. For Feature Groups A and B, Type C1 or C2 will be provided as set forth in Technical Reference PUB 62500.

15. Interface Groups, Transmission Specifications and Channel Interfaces (Cont'd)

15.2 Transmission Specifications Switched Access Service (Cont'd)

15.2.2 Data Transmission Parameters

Two types of Data Transmission Parameters, i.e., Type DA and Type DB, are provided for the Feature Group arrangements. The specific applications in terms of the Feature Groups with which they are provided are set forth in 6.2.1(C), 6.2.2(C), 6.2.3(C) and 6.2.4(C) preceding. Following are descriptions of each.

(A) Data Transmission Parameters Type DA

(1) Signal to C-Notched Noise Ratio

The Signal to C-Notched Noise Ratio is equal to or greater than 33 dB.

(2) Envelope Delay Distortion

The maximum Envelope Delay Distortion for the frequency bands and route miles specified is:

604 to 2804 Hz	
less than 50 route miles	500 microseconds equal to
or greater than 50 route miles	900 microseconds
1004 to 2404 Hz	
less than 50 route miles	200 microseconds
equal to or greater than 50 route miles	400 microseconds

(3) Impulse Noise Counts

The Impulse Noise Counts exceeding a 65 dBrnCO threshold in 15 minutes is no more than 15 counts.

(4) Intermodulation Distortion

The Second Order (R2) and Third Order (R3) Intermodulation Distortion products are equal to or greater than:

Second Order (R2)	33 dB
Third Order (R3)	37 dB

15. Interface Groups, Transmission Specifications and Channel Interfaces (Cont'd)

15.2 Transmission Specifications Switched Access Service (Cont'd)

15.2.2 Data Transmission Parameters (Cont'd)

(A) Data Transmission Parameters Type DA (Cont'd)

(5) Phase Jitter

The Phase Jitter over the 4-300 Hz frequency band is less than or equal to 5□ peak-to-peak.

(6) Frequency Shift

The maximum Frequency Shift does not exceed -2 to +2 Hz.

(B) Data Transmission Parameters Type DB

(1) Signal to C-Notched Noise Ratio

The signal to C-Notched Noise Ratio is equal to or greater than 30 dB.

(2) Envelope Delay Distortion

The maximum Envelope Delay Distortion for the frequency bands and route miles specified is:

604 to 2804 Hz	
less than 50 route miles	800 microseconds equal to
or greater than 50 route miles	1000 microseconds
1004 to 2404 Hz	
less than 50 route miles	320 microseconds equal to
or greater than 50 route miles	500 microseconds

(3) Impulse Noise Counts

The Impulse Noise Counts exceeding a 67 dBrnCO threshold in 15 minutes is no more than 15 counts.

15. Interface Groups, Transmission Specifications and Channel Interfaces (Cont'd)

15.2 Transmission Specifications Switched Access Service (Cont'd)

15.2.2 Data Transmission Parameters (Cont'd)

(B) Data Transmission Parameters Type DB (Cont'd)

(4) Intermodulation Distortion

The Second Order (R2) and Third Order (R3) Intermodulation Distortion products are equal to or greater than:

Second Order (R2)	31 dB
Third Order (R3)	34 dB

(5) Phase Jitter

The Phase Jitter over the 4-300 Hz frequency band is less than or equal to 7□ peak-to-peak.

(6) Frequency Shift

The maximum Frequency Shift does not exceed -2 to +2 Hz.

15. Interface Groups, Transmission Specifications and Channel Interfaces (Cont'd)

15.3 Special Access Channel Interface and Network Channel Codes

This section explains the Channel Interface codes and Network Channel codes that the customer must specify when ordering Special Access Service, Switched Access Entrance Facilities, and Voice Grade and High Capacity Direct-Trunked Transport. Included is an example which explains the specific characters of the code, a glossary of Channel Interface codes, impedance levels, Network Channel codes and compatible Channel Interfaces.

Example: If the customer specifies an NT Network Channel Code and a 2DC8-3 Channel Interface at the customer's premises, the following is being requested:

NT = Metallic Channel with a Predefined Technical Specification Package (1)
2 = Number of physical wires at customer premises
DC = Facility interface for direct current or voltage
8 = Variable impedance level
3 = Metallic facilities (DC continuity) for direct current/low frequency control signals or slow speed data (30 baud)

15.3.1 Glossary of Channel Interface Codes and Options

Code	Option	Definition
AB -		accepts 20 Hz ringing signal at customer's point of termination
AC -		accepts 20 Hz ringing signal at customer's end user's point of termination
CT -		Centrex Tie Trunk Termination
DA -		data stream in VF frequency band at customer's end user's point of termination
DB -		data stream in VF frequency band at customer's point of termination
	- 10	VF for TG1 and TG2
	- 43	VF for 43 Telegraph Carrier type signals, TG1 and TG2
DC -		direct current or voltage
	- 1	monitoring interface with series RC combination (McCulloh format)
	- 2	Telephone Company energized alarm channel
	- 3	Metallic facilities (DC continuity) for direct current/low frequency control signals or slow speed data (30 baud)

15. Interface Groups, Transmission Specifications and Channel Interfaces (Cont'd)

15.3 Special Access Channel Interface and Network Channel Codes (Cont'd)

15.3.1 Glossary of Channel Interface Codes and Options (Cont'd)

Code	Option	Definition
DD -		DATAPHONE Select-A-Station (and TABS) interface at customer's point of termination
DE -		DATAPHONE Select-A-Station (and TABS) interface at the customer's end user's point of termination.
DS -		digital hierarchy interface
	- 15	1.544 Mbps (DS1) format per PUB 41451 plus D4
	- 15E	8-bit PCM encoded in one 64 kbps of the DS1 signal
	- 15F	8-bit PCM encoded in two 64 kbps of the DS1 signal
	- 15G	8-bit PCM encoded in three 64 kbps of the DS1 signal
	- 15H	14/11-bit PCM encoded in six 64 kbps of the DS1 signal
	- 15J	1.544 Mbps format per PUB 41451
	- 15K	1.544 Mbps format per PUB 41451 plus extended framing format
	- 15L	1.544 Mbps (DS1) with SF signaling
	- 27	274.176 Mbps (DS4)
	- 27L	274.176 Mbps (DS4) with SF signaling
	- 31	3.152 Mbps (DS1C)
	- 31L	3.152 Mbps (DS1C) with SF signaling
	- 44	44.736 Mbps (DS3)
	- 44L	44.736 Mbps (DS3) with SF signaling
	- 63	6.312 Mbps (DS2)
	- 63L	6.312 Mbps (DS2) with SF signaling
DU -		digital access interface
	- 24	2.4 kbps
	- 48	4.8 kbps
	- 56	56.0 kbps
	- 96	9.6 kbps
	- A	1.544 Mbps format per PUB 41451
	- B	1.544 Mbps format per PUB 41451 plus D4
	- C	1.544 Mbps format per PUB 41451 plus extended farming format
DX -		duplex signaling interface at customer's point of termination
DY -		duplex signaling interface at customer's end user's point of termination

15. Interface Groups, Transmission Specifications and Channel Interfaces (Cont'd)

15.3 Special Access Channel Interface and Network Channel Codes (Cont'd)

15.3.1 Glossary of Channel Interface Codes and Options (Cont'd)

Code	Option	Definition
EA -	E	Type I E&M Lead Signaling. Customer at POT or customer's end user at POT originates on E Lead.
EA -	M	Type I E&M Lead Signaling. Customer at POT or customer's end user at POT originates on M Lead.
EB -	E	Type II E&M Lead Signaling. Customer at POT or customer's end user at POT originates on E Lead.
EB -	M	Type II E&M Lead Signaling. Customer at POT or customer's end user at POT originates on M Lead.
EC -		Type III E&M signaling at customer POT
EX -	A	tandem channel unit signaling for loop start or ground start and customer supplies open end (dial tone, etc.) functions.
EX -	B	tandem channel unit signaling for loop start or ground start and customer supplies closed end (dial pulsing, etc.) functions.
GO -		ground start loop signaling - open end function by customer or customer's end user
GS -		ground start loop signaling - closed end function by customer or customer's end user
IA -		E.I.A. (25 pin RS-232)
LA -		end user loop start loop signaling - Type A OPS registered port open end
LB -		end user loop start loop signaling - Type B OPS registered port open end
LC -		end user loop start loop signaling - Type C OPS registered port open end
LO -		loop start loop signaling - open end function by customer or customer's end user
LR -		20 Hz automatic ringdown interface at customer with Telephone Company provided PLAR
LS -		loop start loop signaling - closed end function by customer or customer's end user
NO -		no signaling interface, transmission only

15. Interface Groups, Transmission Specifications and Channel Interfaces (Cont'd)

15.3 Special Access Channel Interface and Network Channel Codes (Cont'd)

15.3.1 Glossary of Channel Interface Codes and Options (Cont'd)

Code	Option	Definition
PR		protective relaying*
RV -	0	reverse battery signaling, one way operation originate by customer
-	T	reverse battery signaling, one way operation, terminate function by customer or customer's end user
SF -		single frequency signaling with VF band at either customer POT or customer's end user POT
TF -		telephotograph interface
TT -		telegraph/teletypewriter interface at either customer POT or customer's end user POT
-	2	20.0 milliamperes
-	3	3.0 milliamperes
-	6	62.5 milliamperes
TV -		television interface
-	1	combined (diplexed) video and one audio signal
-	2	combined (diplexed) video and two audiosignals
-	5	video plus one (or two) audio 5 kHz signal(s) or one (or two) two wire
-	15	video plus one (or two) audio 15 kHz signal(s)

*Available only for the transmission of audio tone protective relaying signals used in the protection of electric power systems during fault conditions.

15. Interface Groups, Transmission Specifications and Channel Interfaces (Cont'd)

15.3 Special Access Channel Interface and Network Channel Codes (Cont'd)

15.3.2 Impedance

The nominal reference impedance with which the channel will be terminated for the purpose of evaluating transmission performance:

Value (ohms)	Code(s)
110	0
150	1
600	2
900	3+
135	5
75	6
124	7
Variable	8
100	9

+For those interface codes with a 4-wire transmission path at the customer designated POT, rather than a standard 900 ohm impedance the code (3) denotes a customer provided transmission equipment termination. Such terminations were provided to customers in accordance with the F.C.C. Docket No. 20099 Settlement Agreement.

15. Interface Groups, Transmission Specifications and Channel Interfaces (Cont'd)

15.3 Special Access Channel Interface and Network Channel Codes (Cont'd)

15.3.3 Digital Hierarchy Channel Interface Codes (4DS)

Customers selecting the multiplexed four-wire DSX-1 or higher facility interface option at the customer designated premises will be requested to provide subsequent system and channel assignment data. The various digital bit rates in the digital hierarchy employ the channel interface code 4DS8, 4DS0 or 4DS6 plus the speed options indicated below:

Interface Code and Speed Option	Nominal Bit Rate (Mbps)	Digital Hierarchy Level
4DS8-15	1.544	DS1

15.3.4 Service Designator/Network Channel Code Conversion Table

The purpose of this table is to show the relationship between the service designator codes (e.g. VGC, MT2, etc.) and the network channel codes that are used for:

Service Designator Code	Network Channel Code	Bit Rate
MTC	MQ	
MT1	NT	
MT2	NU	
MT3	NV	
TGC	NQ	
TG1	NW	
TG2	NY	
VGC	LQ	
VGW	SE	
VG1	LB	
VG2	LC	

15. Interface Groups, Transmission Specifications and Channel Interfaces (Cont'd)

15.3 Special Access Channel Interface and Network Channel Codes (Cont'd)

15.3.4 Service Designator/Network Channel Code Conversion Table (Cont'd)

Service Designator Code	Network Channel Code	Bit Rate
VG3	LD	
VG4	LE	
VG5	LF	
VG6	LG	
VG7	LH	
VG8	LJ	
VG9	LK	
VG10	LN	
VG11	LP	
VG12	LR	
TV1	TV	
TV2	TW	
DA4	XH	56.0 Kbps
HC1	HC	1.544 Mbps
HC3	HF	44.736 Mbps

15. Interface Groups, Transmission Specifications and Channel Interfaces (Cont'd)

15.3 Special Access Channel Interface and Network Channel Codes (Cont'd)

15.3.5 Compatible Channel Interfaces

The following tables show the channel interface codes (CIs) which are compatible:

(A) Metallic

Compatible CIs	
2DC8-1	2DC8-2
2DC8-3	2DC8-3
4DS8-*	2DC8-1
4DS8-*	2DC8-2

(B) Telegraph Grade

Compatible CIs		Compatible CIs	
2DB2-10	10IA8	4DB2-10	10IA8
	2TT2-2		2TT2-2
	4TT2-2		4TT2-2
2DB2-43+	10IA8	4DB2-43+	10IA8
	2TT2-2		2TT2-6
	2TT2-6		4TT2-2
	4TT2-2		
		4DS8-*	10IA8
2TT2-2	2TT2-2		2TT2-2
			2TT2-6
2TT2-3	2TT2-2		4TT2-2
	4TT2-2		4TT2-6
2TT2-6	2TT2-6	4TT2-2	4TT2-2
	4TT2-6		
		4TT2-6	2TT2-6

* See 15.3.3 preceding for explanation.
\+ Supplemental Channel Assignment information required.

15. Interface Groups, Transmission Specifications and Channel Interfaces (Cont'd)

15.3 Special Access Channel Interface and Network Channel Codes (Cont'd)

15.3.5 Compatible Channel Interfaces (Cont'd)

(C) Voice Grade

Compatible CIs	Compatible CIs		Compatible CIs		
2AB2	2AC2	2DB2	2DA2	2LR2	2LR2
2AB3	2AC2	2DB3	2DA2	2LR3	2LR2
2CT3	2DY2	2DX3	2LA2	2LS	2GS
	4DS8*		2LB2		2LS
	4DX2		2LC2		4GS
	4DX3		2LO3		4LS
	4DY2		2LS2		
	4EA2-E		2LS3	2LS2	2LA2
	4EA2-M				2LB2
	4SF2	2GO2	2GS2		2LC2
	4SF3		2GS3		
	6DX2			2LS3	2LA2
	6DY2	2GO3	2GS2		2LB2
	6DY3		2GS3		2LC2
	6EA2-E				
	6EA2-M	2GS	2GS	2NO2	2DA2
	6EB2-E		2LS		2NO2
	6EB2-M		4GS		
	6EB2-E		4LS	2NO3	2NO2
	6EB2-M				2PR2
	6EB3-E	2LO2	2LS2		
	8EB2-E		2LS3	2TF3	2TF2
	8EB2-M				
	8EC2	2LO3	2LS2		
	9DY2		2LS3		
	9DY3				
	9EA2				
	9EA3				

* See 15.3.3 preceding for explanation.

15. Interface Groups, Transmission Specifications and Channel Interfaces (Cont'd)

15.3 Special Access Channel Interface and Network Channel Codes (Cont'd)

15.3.5 Compatible Channel Interfaces (Cont'd)

(C) Voice Grade

Compatible CIs

4AB2	2AC2
	4AB2
	4AC2
	4SF2
4AB3	2AC2
	4AC2
	4SF2
4AC2	2AC2
	4AC2

15. Interface Groups, Transmission Specifications and Channel Interfaces (Cont'd)

15.3 Special Access Channel Interface and Network Channel Codes (Cont'd)

15.3.5 Compatible Channel Interfaces (Cont'd)

(C) Voice Grade (Cont'd)

Compatible CIs	Compatible CIs		Compatible CIs		
		4DS8-*	2AC2	4DS8-*	4DG2
			2DA2		4LR2
			2DY2		4LS2
			2GO2		4NO2
4DA2	4DA2		2G03		4PR2
			2GS2		4RV2-T
4DB2	2DA2		2GS3		4SF2
	2NO2		2LA2		4SF3
	2PR2		2LB2		4TF2
	4DA2		2LC2		6DA2
	4DB2		2LO2		6DY2
	4NO2		2LO3		6DY3
	4PR2		2LR2		6EA2-E
	6DA2		2LS2		6EA2-M
			2LS3		6EB2-E
4DD3	2DE2		2NO2		6EB2-M
	4DE2		2PR2		6GS2
			2RV2-T		6LS2
			2TF2		8EB2-E
			4AC2		8EB2-M
			4DA2		9DY2
			4DE2		9DY3
			4DX2		9EA2
			4DX3		9EA3
			4DY2		
			4EA2-E		
			4EA2-M		

* See 15.3.3 preceding for explanation.

15. Interface Groups, Transmission Specifications and Channel Interfaces (Cont'd)

15.3 Special Access Channel Interface and Network Channel Codes (Cont'd)

15.3.5 Compatible Channel Interfaces (Cont'd)

(C) Voice Grade (Cont'd)

Compatible CIs	Compatible CIs		Compatible CIs		
4DX2	2DY2	4DX2	8EB2-E	4DX3	6DY2
	2LA2		8EB2-M		6DY3
	2LB2		9DY2		6EA2-E
	2LC2		9DY3		6EA2-M
	2L03		9EA2		6EB2-E
	2LS2		9EA3		6EB2-M
	2LS3				6LS2
	2RV2-T	4DX3	2DY2		8EB2-E
	4DX2		2LA2		8EB2-M
	4DY2		2LB2		9DY2
	4EA2-E		2LC2		9DY3
	4EA2-M		2LO3		9EA2
	4LS2		2LS2		9EA3
	4RV2-T		2LS3		
	4SF2		2RV2-T	4DY2	2DY2
	4SF3		4DX2		4DY2
	6DY2		4DX3		
	6DY3		4DY2		
	6EA2-E		4EA2-E		
	6EA2-M		4EA2-M		
	6EB2-E		4LS2		
	6EB2-M		4RV2-T		
	6LS2		4SF2		
			4SF3		

15. Interface Groups, Transmission Specifications and Channel Interfaces (Cont'd)

15.3 Special Access Channel Interface and Network Channel Codes (Cont'd)

15.3.5 Compatible Channel Interfaces (Cont'd)

(C) Voice Grade (Cont'd)

Compatible CIs	Compatible CIs		Compatible CIs		
4EA2-E	2DY2	4EA3-E	2DY2	4GO2	2GO2
	4DY2		4DY2		2GO3
	4EA2-E		4EA2-E		2GS2
	4EA2-M		4EA2-M		2GS3
	4SF2		4SF2		4GS2
	6DY2		6DY2		4SF2
	6DY3		6DY3		6GS2
	6EB2-E		6EA2-E		
	6EB2-M		6EA2-M	4G03	2GO2
	8EB2-E		6EB2-E		2GS2
	8EB2-M		6EB2-M		2GS3
	9DY2		8EB2-E		4GS2
	9DY3		8EB2-M		4SF2
			9DY2		6GS2
4EA2-M	2DY2		9DY3		
	4DY2		9EA2		
	4EA2-M		9EA3	4GS	2GS
	4SF2		6DY2		2LS
	6DY3				4GS
	6EB2-E				4LS
	6EB2-M				
	8EB2-E				
	8EB2-M				
	9DY2				
	9DY3				

15. Interface Groups, Transmission Specifications and Channel Interfaces (Cont'd)

15.3 Special Access Channel Interface and Network Channel Codes (Cont'd)

15.3.5 Compatible Channel Interfaces (Cont'd)

(C) Voice Grade (Cont'd)

Compatible CIs	Compatible CIs		Compatible CIs		
4L02	2LS2	4LS3	2LA2	4SF2	2L03
	2LS3		2LB2		2LR2
	4LS2		2LC2		2LS2
	4SF2		2LO2		2LS3
	6LS2		2LO3		2RV2-T
			4SF2		4AC2
4LO3	2LS2				4DY2
	2LS3	4NO2	2DA2		4LS2
	4LS2		2DE2		4RV2-T
	4SF2		2NO2		4SF2
	6LS2		4DA2		6DY2
			4DE2		6DY3
4LR2	2LR2		4NO2		6GS2
	4LR2		6DA2		9DY2
	4SF2				9DY3
		4RV2-O	2RV2-T		
4LR3	2LR2		4RV2-T	4SF3	2DY2
	4LR2		4SF2		2GO3
	4SF2				2GS2
		4SF2	2AC2		2GS3
4LS	2GS		2DY2		2LA2
	2LS		2GS2		2LB2
	4GS		2GS3		2LC2
	4LS		2LA2		2LO3
			2LB2		2LR2
4LS2	2LA2		2LC2		
	2LB2				
	2LC2				
	2LO2				
	2LO3				

15. Interface Groups, Transmission Specifications and Channel Interfaces (Cont'd)

15.3 Special Access Channel Interface and Network Channel Codes (Cont'd)

15.3.5 Compatible Channel Interfaces (Cont'd)

(C) Voice Grade (Cont'd)

Compatible CIs	Compatible CIs		Compatible CIs		
4SF3	2LS2	6DA	4DA2	6DY3	2DY2
	2LS3		6DA2		4DY2
	2RV2-T				6DY2
	4DY2	6DX2	2DY2		6DY3
	4EA2-E		4DY2		
	4EA2-M		4EA2-E	6EA2-E	2AC2
	4GS2				
	4LR2		4EA2-M		2DY2
	4LS2		4SF2		2LA2
	4RV2-T		6DY2		2LB2
	4SF2		6DY3		2LC2
	4SF3		6EA2-E		2LO3
	6DY2		6EA2-M		2LS2
	6DY3		6EB2-E		2LS3
	6EB2-E		6EB2-M		2RV2-T
	6EB2-M		8EB2-E		4AC2
	6GS2		8EB2-M		4DY2
	6LS2		9DY2		4EA2-E
	9DY2		9DY3		4EA2-M
	9DY3		9EA2		4LS2
	9EA2		9EA3		4RV2-T
	9EA3				4SF2
		6DY2	2DY2		4SF3
4TF2	2TF2		4DY2		6DY2
	4TF2		6DY2		6DY3
					6EA2-E
					6EA2-M

15. Interface Groups, Transmission Specifications and Channel Interfaces (Cont'd)

15.3 Special Access Channel Interface and Network Channel Codes (Cont'd)

15.3.5 Compatible Channel Interfaces (Cont'd)

(C) Voice Grade (Cont'd)

Compatible CIs	Compatible CIs		Compatible CIs		
6EA2-E	6EB2-E	6EA2-M	6DY2	6EB3-E	2DY2
	6EB2-M		6DY3		4DY2
	6LS2		6EA2-M		4EA2-E
	8EB2-E		6EB2-E		4EA2-M
	8EB2-M		6EB2-M		4SF2
	9DY2		6LS2		6DY2
	9DY3		8EB2-E		6DY3
			8EB2-M		6EA2-E
6EA2-M	2AC2		9DY2		6EA2-M
	2DY2		9DY3		8EB2-E
	2LA2				8EB2-M
	2LB2	6EB2-E	2DY2		9DY2
	2LC2		4DY2		9DY3
	2L03		4SF2		9EA2
	2LS2		6DY2		9EA3
	2LS3		6DY3		
	2RV2-T		6EB2-E	6EX2-A	2GS2
	4AC2		6EB2-M		2GS3
	4DY2		9DY2		2LS2
	4EA2-E		9DY3		2LS3
	4EA2-M				4GS2
	4LS2	6EB2-M	2DY2		4LS2
	4RV2-T		4DY2		4SF2
	4SF2		4SF2		6GS2
	4SF3		6DY2		6LS2
			6DY3		
			6EB2-M		
			9DY2		
			9DY3		

15. Interface Groups, Transmission Specifications and Channel Interfaces (Cont'd)

15.3 Special Access Channel Interface and Network Channel Codes (Cont'd)

15.3.5 Compatible Channel Interfaces (Cont'd)

(C) Voice Grade (Cont'd)

Compatible CIs		Compatible CIs	Compatible CIs		
6EX2-B	2G03	8BE2-E	2AC2	8EB2-M	2AC2
	2LA2		2DY2		2DY2
	2LB2		2LA2		2LA2
	2LC2		2LB2		2LB2
	2LO2		2LC2		2LC2
	2L03		2L03		2LO3
	2LR2		2LS2		2LS2
	4LR2		2LS3		2LS3
	4SF2		2RV2-T		2RV2-T
			4AC2		4AC2
6G02	2GO2		4DY2		4DY2
	2GS2		4LS2		4LS2
	2GS3		4RV2-T		4RV2-T
	4GS2		4SF2		4SF2
	4SF2		4SF3		4SF3
	6GS2		6DY2		6DY2
			6DY3		6DY3
6L02	2LS2		6EB2-E		6EB2-E
	2LS3		6EB2-M		6EB2-M
	4LS2		6LS2		6LS2
	4SF2		8EB2-E		8EB2-M
	6LS2		8EB2-M		9DY2
			9DY2		9DY3
6LS2	2LA2		9DY3		
	2LB2				
	2LC2				
	2LO2				
	2LO3				
	4SF2				

15. Interface Groups, Transmission Specifications and Channel Interfaces Cont'd)

15.3 Special Access Channel Interface and Network Channel Codes (Cont'd)

15.3.5 Compatible Channel Interfaces (Cont'd)

(C) Voice Grade (Cont'd)

Compatible CIs	Compatible CIs		Compatible CIs		
8EC2	2DY2	9DY2	2DY2	9EA3	2DY2
	4DY2		4DY2		4DY2
	4EA2-E		6DY2		4EA2-E
	4EA2-M		6DY3		4EA2-M
	4SF2		9DY2		6DY2
	6DY2				6DY3
	6DY3	9DY3	2DY2		6EA2-E
	6EA2-E		4DY2		6EA2-M
	6EA2-M		6DY2		6EB2-E
	6EB2-E		6DY3		6EB2-M
	6EB2-M		9DY2		8EB2-E
	8EB2-E		9DY3		8EB2-M
	8EB2-M				9DY2
	9DY2	9EA2	2DY2		9DY3
	9DY3		4DY2		9EA3
	9EA2		4EA2-E		
	9EA3		4EA2-M		
			6DY2		
			6DY3		
			6EA2-E		
			6EA2-M		
			6EB2-E		
			6EB2-M		
			8EB2-E		
			8EB2-M		
			9DY2		
			9DY3		
			9EA2		
			9EA3		

15. Interface Groups, Transmission Specifications and Channel Interfaces (Cont'd)

15.3 Special Access Channel Interface and Network Channel Codes (Cont'd)

15.3.5 Compatible Channel Interfaces (Cont'd)

(D) Video

Compatible CIs		Compatible CIs	
2TV6-1	4TV6-15 4TV7-15	4TV7-5	4TV6-5 4TV7-5
2TV6-2	6TV6-15 6TV7-15	4TV7-15	4TV6-15 4TV7-15
2TV7-1	4TV6-15 4TV7-15	6TV6-5	6TV6-5 6TV7-5
2TV7-2	6TV6-15 6TV7-15	6TV6-15	6TV6-15 6TV7-15
4TV6-5	4TV6-5 4TV7-5	6TV7-5	6TV6-5 6TV7-5
4TV6-15	4TV6-15 4TV7-15	6TV7-15	6TV6-15 6TV7-15

15. Interface Groups, Transmission Specifications and Channel Interfaces Cont'd)

15.3 Special Access Channel Interface and Network Channel Codes (Cont'd)

15.3.5 Compatible Channel Interfaces (Cont'd)

(E) Digital Data

		Compatible CIs	Compatible CIs		Compatible CIs		
4DS8-15	4DS8-15+	4DU5-24	4DU5-24	6DU5-24	6DU5-24		
			4DU5-24				
			4DU5-48	4DU5-48	4DU5-48	6DU5-48	6DU5-48
			4DU5-56				
			4DU5-96	4DU5-96	4DU5-96	6DU5-56	6DU5-56
			6DU5-24				
			6DU5-48	4DU8-56	4DU5-56	6DU5-96	6DU5-96
			6DU5-96				

+Available only as a cross connect of two digital channels at appropriate digital speeds at a Telephone Company hub.

15. Interface Groups, Transmission Specifications and Channel Interfaces (Cont'd)

15.3 Special Access Channel Interface and Network Channel Codes (Cont'd)

15.3.5 Compatible Channel Interfaces (Cont'd)

(F) High Capacity

Compatible CIs		Compatible CIs	
4DS0-63	4DS0-63	4DS8-15J	4DU8-A
4DU8-0A,B or C		6DU8-A	
6DU8-A,B or C			
4DS8-15K		4DU8-B	
4DS6-27	4DS6-27	4DU8-C	
4DU8-A,B or C		6DU8-B	
6DU8-A,B or C		6DU8-C	
4DS6-44	4DS6-44	4DS8-31	4DS8-31
4DU8-A,B or C		4DU8-A,B or C	
6DU8-A,B or C		6DU8-A,B or C	
4DS8-15	4DS8-15+	4DU8-A,B	
4DU8-B	or C	4DU8-A,B or C	
6DU8-8			

+Available only as a cross connect of two individual channels of 1.544 Mbps facilities at a Telephone Company hub.