NEBRASKA

ACCESS SERVICES TARIFF

OF

Bandwidth.com CLEC, LLC

This tariff contains the descriptions, regulations and rates applicable to the furnishing of access service and facilities by Bandwidth.com CLEC, LLC ("the Company") within the State of Nebraska. This tariff is on file with the Nebraska Public Service Commission. Copies may be inspected during normal business hours at the Company's principal place of business at 900 Main Campus Drive, Suite 500, **(T)**
Raleigh, NC 27606. **(T)**

RECEIVED
AUG 11 2014
NPSC-Comm. Dept.

By: Lisa Jill Freeman, Vice President & Regulatory Compliance Officer
900 Main Campus Drive, Suite 500,
Raleigh, NC 27606

CHECK PAGE

Pages of this tariff are effective as of the date shown at the bottom of the respective page(s). Original and revised pages as named below comprise all changes from the original tariff and are currently in effect as of the date on the bottom of this page.

PAGE	REVISION		PAGE	REVISION	
Title	1st Revised		27	Original	
Check	5th Revised	*	28	Original	
1	1st Revised		29	Original	
2	Original		30	Original	
3	Original		31	Original	
4	Original		32	Original	
5	1st Revised		33	Original	
6	1st Revised		34	1st Revised	
7	Original		35	Original	
8	1st Revised		36	Original	
9	1st Revised		37	Original	
10	Original		38	Original	
11	Original		39	Original	
12	Original		40	Original	
13	Original		41	1st Revised	
14	Original		41.1	Original	
15	1st Revised		42	2nd Revised	
16	1st Revised		43	1st Revised	
17	Original		44	2nd Revised	
18	Original		45	2nd Revised	
19	Original		46	1st Revised	
20	Original		47	3rd Revised	*
21	Original		47.1	Original	
22	Original		48	Original	
23	Original		49	Original	
24	Original		50	Original	
25	Original		51	Original	
26	1st Revised				
26.1	Original				
26.2	Original				
26.3	Original				
26.4	Original				

* - Indicates those pages included with this filing

RECEIVED
JUL - 6 2016
NPSC-Comm. Dept.

TABLE OF CONTENTS

TABLE OF CONTENTS	1	
SYMBOLS	2	
TARIFF FORMAT	3	
SECTION 1- DEFINITIONS	4	
SECTION 2- RULES AND REGULATIONS	10	
SECTION 3- ORDERING OPTIONS FOR ACCESS SERVICE	40	
SECTION 4- SWITCHED ACCESS SERVICE	42	
SECTION 5- SWITCHED ACCESS RATES	44	
SECTION 6 - CONTRACTS AND INDIVIDUAL CASE BASIS ARRANGEMENTS	48	
SECTION 7 – CALL FLOW DIAGRAMS	49	**(N)**

RECEIVED
SEP 13 2010
NPSC-Comm. Dept.

By: Jonathan S. Mitchell, CEO
4001 Weston Parkway
Cary, NC 27513

SYMBOLS

The following are the only symbols used for the purposes indicated below:

C	Changed regulation.
D	Delete or discontinue.
I	Change resulting in an increase to a customer's bill.
M	Moved from or to another tariff location.
N	New rate, regulation, condition, or page.
R	Change resulting in a reduction to a customer's bill.
T	Change in text

RECEIVED
OCT 13 2009
NPSC-Comm. Dept.

TARIFF FORMAT

A. Page Numbering - Page numbers appear in the upper right corner of the page. Pages are numbered sequentially. When a new page is added between pages already in effect, a decimal is added. For example, a new page added between pages 14 and 15 would be 14.1.

B. Page Revision Numbers - Revision numbers also appear in the upper right corner of each page. These numbers indicate the most current page version on file with the Commission. For example, the 4th revised Page 14 cancels the 3rd revised Page 14. Because of various suspension periods, deferrals, etc. the Commission follows in its tariff approval process, the most current page number on file with the Commission is not always the page in effect. Consult the Check Page for the page currently in effect.

C. Paragraph Numbering Sequence - There are nine levels of paragraph coding. Each level of coding is subservient to the next higher level:

2.
2.1.
2.1.1.
2.l.l.A.
2.l.l.A.1.
2.1.1.A.1.(a).
2.1.1.A.1.(a).I.(i).
2.1.1 .A. 1 .(a).I.(i).
2.1.1 .A. 1 .(a).I.(i).(l).

D. Check Pages - When a tariff filing is made with the Commission, an updated Check Page accompanies the filing. The Check Page lists the pages contained in the tariff, with the current revision number of each page. All revisions made in a given filing are designated by an asterisk (*). The tariff user should refer to the latest Check Page to find out if a particular page is the most current on file with the Commission.

RECEIVED
OCT 13 2009
NPSC-Comm. Dept.

SECTION 1 - DEFINITIONS

Certain terms used generally throughout this tariff are defined below.

Access Code: A uniform seven-digit code assigned by the Company to an individual Customer. The seven-digit code has the form 950-XXXX or 101XXXX.

Access Service: Access to the network of an Interexchange Carrier for the purpose of originating or terminating communications.

Access Service Request (ASR): The industry service order format used by Access Service Customers and access providers as agreed to by the Ordering and Billing Forum.

Authorized User: A person, firm, corporation or other entity that either is authorized by the Customer to use Access Services or is placed in a position by the Customer, either through acts or omissions, to use Access Service.

Carrier or Common Carrier: See Interexchange Carrier or Exchange Carrier.

Channel: A communications path between two or more points.

CIC: An interexchange carrier identification code.

Commission: The Nebraska Public Service Commission.

Common Channel Signaling (CCS): A high-speed packet switched communications network that is separate (out of band) from the public packet switched and message networks. It is used to carry addressed signaling messages for individual trunk circuits and/or database related services between signaling points in the CCS network.

Company: Bandwidth.com CLEC, LLC, issuer of this tariff.

Constructive Order: Delivery of calls to or acceptance of calls from the Company's End User locations over the Company-switched local exchange services constitutes a Constructive Order by the Customer to purchase switched access services as described herein. Similarly the selection by a Company's End User of the Customer as the presubscribed IXC constitutes a Constructive Order of switched access by the Customer.

RECEIVED
OCT 13 2009
NPSC-Comm. Dept.

SECTION 1 – DEFINITIONS, (CONT'D.)

Customer: The person, firm, corporation or other entity that orders Service and is responsible for the payment of charges and for compliance with the Company's tariff regulations. The Customer could be an End User, interexchange carrier, a wireless provider, other telecommunications carriers or providers originating or terminating VoIP-PSTN Access Traffic or any other carrier authorized to operate. **(T)** | **(T)**

DS0: Digital Signal Level 0; a dedicated full duplex digital channel with line speeds of 2.4, 4.8, 9.36, 19.2, 56 or 64 Kbps.

DS1: Digital Signal Level 1: a dedicated, high capacity, full duplex channel with a line speed of 1.544 Mbps isochronous serial data having a line signal format of either Alternate Mark Inversion (AMI) or Bipolar with 8 Zero Substitution (B8ZS) and either Superframe (D4) or Extended Superframe (ESF) formats. DS 1 service has the capacity of 24 Voice Grade or DSO services.

DS3: Digital Signal Level 3; a dedicated, high capacity, full duplex channel with a line speed of 44.736 Mbps isochronous serial data having a line code of bipolar with three zero substitutions (B3ZS). Equivalent capacity of 28 DS 1 Services.

RECEIVED
FEB - 1 2012
NPSC-Comm. Dept.

SECTION 1 – DEFINITIONS, (CONT'D.)

8YY Data Base Access Service: The term "8YY Data Base Access Service" denotes a toll-free originating Trunk side Access Service when the 8YY Service Access Code (i.e., 800, 822, 833, 844, 855, 866, 877, or 888 as available) is used. **(T)** **(T)**

End User: Any individual, association, corporation, governmental agency or any other entity subscribing to intrastate service provided by an Exchange Carrier where such individual association, corporation, governmental agency or other entity is not an Interexchange Carrier, Local Exchange Carrier, Wireless Carrier or other entity otherwise utilizing the Company's service to provide a telecommunications service (as defined by applicable law) to its own Customers. **(T)** | | **(T)**

Exchange: A group of lines in a unit generally smaller than a LATA established in the tariff of an incumbent local exchange carrier for the administration of communications service in a specified area.

Exchange Carrier: Any individual, partnership, association, joint-stock company, trust, governmental entity or corporation engaged in the provision of local exchange telephone service.

Exchange Message Interface (EMI): the industry standard format used for exchange of telecommunications message information among carriers.

Facility (or Facilities): Any item or items of communications plant or equipment used to provide or connect to the Company.

FCC: Federal Communications Commission.

Holiday: The term "holiday" means 8:00 a.m. to, but not including 11:00 p.m. local time at the originating city on all Company-specified holidays: New Years Day, Memorial Day, Independence Day, Labor Day, Thanksgiving Day, and Christmas Day. When holidays fall on Saturday or Sundays, the holiday rate applies unless a larger discount would normally apply.

Individual Case Basis: A service arrangement in which the regulations, rates and charges are developed based on the specific circumstances of the Customer's situation.

Interexchange Carrier (IXC) or Interexchange Common Carrier: Any individual, partnership, association, joint-stock company, trust, governmental entity or corporation engaged in state or foreign communication for hire by wire or radio, between two or more exchanges.

Kbps: Kilobits per second; thousands of bits per second.

RECEIVED
SEP 13 2010
NPSC-Comm. Dept.

SECTION 1 - DEFINITIONS (Cont'd.)

LATA: A local access and transport area established pursuant to the Modification of Final Judgment entered by the United States District Court for the District of Columbia in Civil Action No. 82-0192 for the provision and administration of communications services.

Line Information Data Base (LIDB): The data base which contains base information such as telephone numbers, calling card numbers and associated billed number restriction data used in connection with the validation and billing of calls.

Local Switching Center: The switching center where telephone exchange service Customer station Channels are terminated for purposes of interconnection to each other and to interoffice Trunks.

Local Traffic: Traffic is "Local Traffic" under this tariff if: (i) the call originates and terminates in the same exchange area; or (ii) the call originates and terminates within different exchanges that share a common mandatory local calling area.

Mbps: Megabits per second; millions of bits per second.

Meet Point: A point of interconnection that is not an end office or tandem.

Meet Point Billing: The arrangement through which multiple Exchange Carriers involved in providing Access Service bill services on a proportional basis under their respective tariffs.

RECEIVED
OCT 13 2009
NPSC-Comm. Dept.

SECTION 1 – DEFINITIONS, (CONT'D.)

Non-Recurring Charges: One-time initial charges for services or facilities, including but not limited to charges for construction, installation, or special fees, for which the Customer becomes liable at the time service is ordered.

Premises: The space occupied by a Customer or Authorized User in a building or buildings or on contiguous property (except railroad rights-of-way, etc.).

Presubscription: An arrangement whereby an End User or other user of the Company's services may select and designate to the Company an Interexchange Carrier (IXC) or Carriers it wishes to access, without an Access Code, for completing intraLATA toll calls and/or interLATA calls. The selected IXC(s) are referred to as the End User's or user's Primary Interexchange Carrier (PIC). **(T)** **(T)**

Query: An inquiry to a database to obtain information, processing instructions or service data.

Recurring Charges: The monthly charges to the Customer for services, facilities and equipment, which continue for the agreed upon duration of the service.

RECEIVED
SEP 13 2010
NPSC-Comm. Dept.

By: Jonathan S. Mitchell, CEO
4001 Weston Parkway
Cary, NC 27513

SECTION 1 – DEFINITIONS, (CONT'D.)

Signaling Point of Interface: The Customer designated location where the SS7 signaling information is exchanged between the Company and the Customer.

Signaling System 7 (SS7): The common Channel Out-of-Band Signaling protocol developed by the Consultative Committee for International Telephone and Telegraph (CCITT) and the American National Standards Institute (ANSI).

Station: Refers to telephone equipment or an exchange access line from or to which calls are placed.

TDM – Time Division Multiplexing – a method of transmitting and receiving voice signals over the Public Switched Telephone Network (PSTN). **(N)** **(N)**

Terminal Equipment: Telecommunications devices, apparatus and associated wiring on the Customer-designated premises.

Trunk: A communications path connecting two switching systems in a network, used in the establishment of an end-to-end connection.

VoIP – Voice over Internet Protocol. Transmission of communication by aid of wire, cable, radio, or other like connection using Voice Over Internet Protocol that is originated or terminated in Internet Protocol (IP) format. VoIP services are those services that require the use of IP compatible customer premises equipment. **(N)** | | **(N)**

VoIP-PSTN Access Traffic - VoIP-PSTN Access Traffic is the access traffic exchanged between the Company and the Customer in time division multiplexing ("TDM") format that originates and/or terminates in Internet protocol ("IP") format. Traffic originates and/or terminates in IP format if it originates from and/or terminates to an end user customer of a service that requires Internet protocol compatible customer premises equipment. **(N)** | | | **(N)**

Wireless Provider: Any carrier authorized to operate as a provider of cellular, personal communications, paging or other form of wireless transmission.

RECEIVED
FEB - 1 2012
NPSC-Comm. Dept.

SECTION 2- RULES AND REGULATIONS

2.1 Undertaking of the Company

2.1.1 Scope

The Company undertakes pursuant to this Tariff to furnish switched or dedicated access communications service. Access Service is available to customers as described herein. The Company may offer these services over its own or resold facilities.

The Company installs, operates, and maintains the communications services provided herein in accordance with the terms and conditions set forth under this Tariff. The Company may act as the Customer's agent for ordering access connection facilities provided by other carriers or entities as required in the Commission's rules and orders, when authorized by the Customer, to allow connection of a Customer's location to the Company network. The Customer shall be responsible for all charges due for such service agreements.

The Company is responsible under this tariff only for the services and facilities provided hereunder, and it assumes no responsibility for any service provided by any other entity that purchases access to the Company's network in order to originate or terminate its own services, or to communicate with its own customers.

The Company's services and facilities are provided on a monthly basis unless otherwise indicated, and are available twenty-four hours per day, seven days per week.

RECEIVED
OCT 13 2009
NPSC-Comm. Dept.

SECTION 2- RULES AND REGULATIONS (Cont'd.)

2.1 Undertaking of the Company (Cont'd.)

2.1.2 Shortage of Equipment or Facilities

A. The Company reserves the right to limit or to allocate the use of existing facilities, or of additional facilities offered by the Company when necessary because of lack of facilities or due to some other cause beyond the Company's control.

B. The furnishing of service under this tariff is subject to the availability on a continuing basis of all the necessary facilities and is limited to the capacity of the Company's facilities as well as facilities the Company may obtain from other Carriers from time to time, to furnish service as required at the sole discretion of the Company.

C. The provisioning and restoration of service in emergencies shall be in accordance with Part 64, Subpart D, Appendix A of the Federal Communications Commission's Rules and Regulations, which specifies the priority system for such activities.

2.1.3 Terms and Conditions

A. Except as otherwise provided herein, service is provided and billed for a minimum period of one month, and shall continue to be provided until canceled by the Customer, in writing, on not less than 30 days notice. Unless otherwise specified herein, for the purpose of computing charges in this tariff, a month is considered to have 30 days.

B. Customers seeking to cancel service have an affirmative obligation to block traffic originating from or terminating to the Company's network. By originating traffic from or originating traffic to the Company's network, the Customer will have constructively ordered the Company's switched access service.

C. The Customer agrees to operate the Company-provided equipment in accordance with instructions of the Company or the Company's agent. Failure to do so will void the Company liability for interruption of service and may make the Customer responsible for damage to equipment.

RECEIVED
OCT 13 2009
NPSC-Comm. Dept.

SECTION 2- RULES AND REGULATIONS (Cont'd.)

2.1 Undertaking of the Company(Cont'd.)

2.1.3 Terms and Conditions (Cont'd.)

D. The Customer agrees to return to the Company all of the Company-provided equipment delivered to Customer within five (5) days of termination of the service in connection with which the equipment was used. Said equipment shall be in the same condition as when delivered to Customer, normal wear and tear only excepted. Customer shall reimburse the Company, upon demand, for any costs incurred by the Company due to Customer's failure to comply with this provision.

E. Customers may be required to enter into written Service Orders which shall contain or reference the name of the Customer, a specific description of the service ordered; the rate to be charged, the duration of the services, and the terms and conditions in this Tariff. Customers are also required to execute other documents as may be reasonable requested by the carrier.

F. A Carrier that routes traffic to the Company's network for termination of exchange, intraLATA or interLATA traffic shall be deemed to have submitted, and the Company shall be deemed to have received, an Access Order at the time traffic is first routed to the Company, unless the Company and the carrier have previously provided for alternative treatment. Carrier and the Company will exchange all required information to measure traffic and invoice charges and credits.

G. At the expiration of the initial term specified in each Service Order, or in any extension thereof, service shall continue on a month-to-month basis at the then-current rate unless terminated by either party upon thirty (30) days written notice. Any termination shall not relieve Customer of its obligation to pay any charges incurred under the Service Order and this Tariff prior to termination. The rights and obligations which by their nature extend beyond the termination of the term of the Service Order shall survive such termination.

RECEIVED
OCT 13 2009
NPSC-Comm. Dept.

SECTION 2- RULES AND REGULATIONS (Cont'd.)

2.1 Undertaking of the Company (Cont'd.)

2.1.4 Liability of the Company

A. The liability of the Company for damages arising out of the furnishing of its Services, including but not limited to mistakes, omissions, interruptions, delays, errors, other defects, or representations by the Company, or use of these services or damages arising out of the failure to furnish the service whether caused by act or omission, shall be limited to the extension of allowances for interruption as set forth in 2.6 below. The extension of such allowances for interruption shall be the sole remedy of the Customer and the sole liability of the Company. The Company will not be liable for any direct, indirect, incidental, special, consequential, exemplary or punitive damages to Customer as a result of any of the Company service, equipment or facilities, or the acts or omissions or negligence of the Company's employees or agents.

B. The Company shall not incur any liability with regard to delayed installation of the Company facilities or commencement of service. With respect to any other claim or suit, by a Customer or by any others, for damages associated with the ordering (including the reservation of any specific number for use with a service), installation (including delays thereof), provision, termination, maintenance, repair interruption or restoration of any service or facilities offered under this tariff, the Company's liability, if any, shall be limited as provided herein.

C. The Company shall not be liable for any delay or failure of performance or equipment due to causes beyond its control, including but not limited to: acts of God, fire, flood, explosion or other catastrophes; any law, order, regulation, direction action, or request of The United States government or of any other government, including state and local governments having or claiming jurisdiction over the Company, or of any department, agency, commission, bureau, corporation, or other instrumentality of any one or more of these federal, state, or local governments, or of any military authority; preemption of existing service in compliance with national emergencies; insurrections; riots; wars; unavailability of rights-of-way or materials; or strikes, lockouts work stoppages, or other labor difficulties.

RECEIVED
OCT 13 2009
NPSC-Comm. Dept.

SECTION 2- RULES AND REGULATIONS (Cont'd.)

2.1 Undertaking of the Company (Cont'd.)

2.1.4 Liability of the Company (Cont'd)

D. The Company shall not be liable for (a) any act or omission of any entity furnishing the Company or the Company's customers facilities or equipment used for the interconnection with Access Services; or (b) for the acts or omissions of other Common Carriers.

E. The Company shall not be liable for any damages or losses due to the fault or negligence of the Customer or due to the failure or malfunction of Customer-provided equipment or facilities.

F. The Customer shall indemnify and hold the Company harmless from any and all loss, claims, demands, suits, or other actions, or any liability whatsoever, whether suffered, made, instituted, or asserted by any other party or person(s), and for any loss, damage, or destruction of any property, whether owned by the Customer or others, caused or claimed to have been caused directly or indirectly by the installation, operation, failure to operate, maintenance, removal, condition, location, or use of any installation or equipment provided by the Company. The Company reserves the right to require each Customer to sign an agreement acknowledging acceptance of the provisions of this Section as a condition precedent to such installations.

G. The Company shall not be liable for any defacement of or damage to Customer's Premises resulting from the furnishing of services or equipment on such Premises or the installation or removal thereof, unless such defacement or damage is caused by the gross negligence or willful misconduct of the Company's agents or employees. No agents or employees of other participating Carriers shall be deemed to be agents or employees of the Company.

RECEIVED
OCT 13 2009
NPSC-Comm. Dept.

SECTION 2 - RULES AND REGULATIONS, (CONT'D.)

2.1 Undertaking of the Company (Cont'd.)

2.1.4 Liability of the Company (Cont'd)

H. Notwithstanding the Customer's obligations as set forth in Section 2.3 below, the Company shall be indemnified, defended and held harmless by the Customer, and by others authorized by it to use the service, against any claim, loss or damage arising from Customer's use of services furnished under this tariff, including: claims for libel, slander, invasion of privacy or infringement of copyright arising from the material, data, information, or other content transmitted via the Company's service; patent infringement claims arising from combining or connecting the service offered by the Company with apparatus and systems of the Customer or others; and all other claims arising out of any act or omission of the Customer or others, in connection with any service provided by the Company pursuant to this tariff

I. The Company shall be indemnified and held harmless by the End User or other user of services hereunder against any claim, loss or damage arising from the End User's or such other user's use of services furnished under this tariff including: claims for libel, slander, invasion of privacy or infringement of copyright arising from the End User's or such other user's own communications; patent infringement claims arising from the End User's or such other user's combining or connecting the service offered by the Company with facilities or equipment furnished by the End User of another Interexchange Carrier; or all other claims arising out of any act or omission of the End User or such other user in connection with any service provided pursuant to this tariff **(T)** | **(T)** **(T)** **(T)** **(T)**

J. The entire liability of the Company for any claim, loss, damage or expense from any cause whatsoever shall in no event exceed sums actually paid to the Company by the Customer for the specific services giving rise to the claim, and no action or proceeding against the Company shall be commenced more than one year after the service is rendered.

RECEIVED
SEP 13 2010
NPSC-Comm. Dept.

SECTION 2 - RULES AND REGULATIONS, (CONT'D.)

2.1 Undertaking of the Company (Cont'd.)

2.1.4 Liability of the Company (Cont'd.)

K. THE COMPANY MAKES NO WARRANTIES OR REPRESENTATION, EXPRESS OR IMPLIED, INCLUDING WARRANTIES OR MERCHANTABILITY OR FITNESS FOR A PARTICULAR USE, EXCEPT THOSE EXPRESSLY SET FORTH HEREIN.

L. The Company shall not be liable for any act or omission of any other company or companies furnishing a portion of the service, or for damages associated with service, Channels, or equipment which result from the operation of Customer-provided systems, equipment, facilities or service which are interconnected with the Company's services.

M. The Company does not guarantee nor make any warranty with respect to service installations at locations at which there is present an atmosphere that is explosive, prone to fire, dangerous or otherwise unsuitable for such installations. The Customer and End User or other user of the Company's services shall indemnify and hold the Company harmless from any and all loss, claims, demands, suits or other actions, or any liability whatsoever, whether suffered, made, instituted or asserted by the Customer or by any other party, for any personal injury to, or death of, any person or persons, or for any loss, damage or destruction of any property, whether owned by the Customer or others, caused or claimed to have been caused directly or indirectly, by the installation, operation, failure to operate, maintenance, removal, presence, condition, locations or use of service furnished by the Company at such locations. **(T)**

RECEIVED
SEP 13 2010
NPSC-Comm. Dept.

SECTION 2- RULES AND REGULATIONS (Cont'd.)

2.1 Undertaking of the Company (Cont'd.)

2.1.4 Liability of the Company (Cont'd.)

N. The Company shall not be liable for the Customer's failure to fulfill its obligations to take all necessary steps including, without limitation, obtaining, installing and maintaining all necessary equipment, materials and supplies for interconnecting the terminal equipment or communications system of the Customer, or any third party acting as its agent, to the Company's Network. The Customer shall secure all licenses, permits, rights-of-way, and other arrangements necessary for such interconnection. In addition, the Customer shall ensure that its equipment and/or system or that of its agent is properly interfaced with the Company's service, that the signals emitted into the Company's Network are of the proper mode, bandwidth, power, data speed, and signal level for the intended use of the Customer and in compliance with the criteria set forth in Section 2.1.6 following, and that the signals do not damage the Company equipment, injure its personnel or degrade service to other Customers. If the Customer or its agent fails to maintain and operate its equipment and/or system or that of its agent properly, with resulting imminent harm to the Company equipment, personnel, or the quality of service to other Customers, the Company, may, upon written notice, require the use of protective equipment at the Customer's expense. If this fails to produce satisfactory quality and safety, the Company may, upon written notice, terminate the Customer's service without liability.

O. The Company shall not be liable for any act or omission concerning the implementation of Presubscription.

P. With respect to Telecommunications Relay Service (TRS), any service provided by the Company that involves receiving, translating, transmitting or delivering messages by telephone, text telephone, a telecommunications device for deaf, or any other instrument over the facilities of the Company or any connecting Carrier, the Company's liability for the interruption or failure of the service shall not exceed an amount equal to the Company's charge for a one-minute call to the called station at the time the affected calls were made.

RECEIVED
OCT 13 2009
NPSC-Comm. Dept.

SECTION 2- RULES AND REGULATIONS (Cont'd.)

2.1 Undertaking of the Company (Cont'd.)

2.1.5 Notification of Service-Affecting Activities

The Company will attempt to provide the Customer reasonable notification of service-affecting activities within its control that may occur in normal operation of its business. Such activities may include, but are not limited to, equipment or facilities additions, removals or rearrangements and routine preventative maintenance. Generally, such activities are not specific to an individual Customer but affect many Customers' services. No specific advance notification period is applicable to all service activities. The Company will work cooperatively with the Customer to determine reasonable notification requirements. With some emergency or unplanned service-affecting conditions, such as an outage resulting from cable damage, notification to the Customer may not be possible.

2.1.6 Provision of Equipment and Facilities

A. The Company shall use reasonable efforts to make available services to a Customer on or before a particular date, subject to the provisions of and compliance by the Customer with, the regulations contained in this tariff. The Company does not guarantee availability by any such date and shall not be liable for any delays in commencing service to any Customer.

B. The Company shall use reasonable efforts to maintain facilities and equipment that it furnishes to the Customer. The Customer may not, nor may the Customer permit others to, rearrange, disconnect, remove, attempt to repair or otherwise interfere with any of the facilities or equipment installed by the Company, except upon the written consent of the Company.

RECEIVED
OCT 13 2009
NPSC-Comm. Dept.

SECTION 2- RULES AND REGULATIONS (Cont'd.)

2.1 Undertaking of the Company (Cont'd.)

2.1.6 Provisions of Equipment and Facilities (cont'd)

C. The Company may substitute, change or rearrange any equipment or facility at any time and from time to time, but shall not thereby alter the technical parameters of the service provided the Customer.

D. Equipment the Company provides or installs at the Customer Premises for use in connection with the services the Company offers shall not be used for any purpose other than that for which the Company provided it.

E. The Customer shall be responsible for the payment of service charges imposed on the Company by another entity, for visits to the Customer Premises when the service difficulty or trouble report results from the use of equipment or facilities provided by any party other than the Company, including but not limited to the Customer.

F. The Company shall not be responsible for the installation, operation, or maintenance of any Customer-provided communications equipment. Where such equipment is connected to the facilities furnished pursuant to this tariff, the responsibility of the Company shall be limited to the furnishing of facilities offered under this tariff and to the maintenance and operation of such facilities. Notwithstanding the above, the Company shall not be responsible for:

1. the transmission of signals by Customer-provided equipment or for the quality of, or defects in, such transmission;

2. the reception of signals by Customer-provided equipment; or

3. network control signaling where such signaling is performed by Customer-provided network control signaling equipment.

RECEIVED
OCT 13 2009
NPSC-Comm. Dept.

SECTION 2- RULES AND REGULATIONS (Cont'd.)

2.1 Undertaking of the Company (Cont'd.)

2.1.6 Provisions of Equipment and Facilities (Cont'd.)

G. The Company intends to work cooperatively with the Customer to develop network contingency plans in order to maintain maximum network capability following natural or man-made disasters that affect telecommunications services.

H. The Company reserves the reasonable right to assign, designate or change telephone numbers, any other call number designations associated with Access Services, or the Company serving central office prefixes associated with such numbers, when necessary in the conduct of its business.

2.1.7 Non-routine Installation

At the Customer's request, installation and/or maintenance may be performed outside the Company's regular business hours or in unusual locations. In such cases, charges based on cost of the actual labor, material, or other costs incurred by or charged to the Company will apply. If installation is started during regular business hours but, at the Customer's request, extends beyond regular business hours into time periods including, but not limited to, weekends, holidays, and/or night hours, additional charges may apply.

RECEIVED
OCT 13 2009
NPSC-Comm. Dept.

SECTION 2- RULES AND REGULATIONS (Cont'd.)

2.1 Undertaking of the Company (Cont'd.)

2.1.8 Special Construction

Subject to the arrangement of the Company and to all of the regulations contained in this tariff, special construction of facilities may be undertaken on a reasonable-efforts basis at the request of the Customer. Special construction is that construction undertaken and characterized by one or more of the following:

A. where facilities are not presently available and there is no other requirement for the facilities so constructed;

B. of a type other than that which the Company would normally utilize in the furnishing of its services;

C. where facilities are to be installed over a route other than that which the Company would normally utilize in the furnishing of its services;

D. where facilities are requested in a quantity greater than that which the Company would normally construct;

E. where installation is on an expedited basis;

F. on a temporary basis until permanent facilities are available;

G. installation involving abnormal costs; or

H. in advance of the Company's normal construction schedules.

Special construction charges for Access Service will be determined on an individual basis.

2.1.9 Ownership of Facilities

Title to all facilities provided in accordance with this tariff remains in the Company, its agents, contractors or suppliers.

RECEIVED
OCT 13 2009
NPSC-Comm. Dept.

SECTION 2- RULES AND REGULATIONS (Cont'd.)

2.2 Prohibited Uses

2.2.1 The services the Company offers shall not be used for any unlawful purposes or for any use for which the Customer has not obtained all required governmental approvals, authorizations, licenses, consents and permits.

2.2.2 The Company may require applicants for service who intend to use the Company's offerings for resale and/or for shared use to file a letter with the Company confirming that their use of the Company's offerings complies with relevant laws and applicable state regulations, policies, orders, and decisions and, if the Reseller intends to provide intrastate services, is certified with the proper state authority.

2.2.3 The Company may require a Customer to immediately shut down its transmission of signals if said transmission is causing interference to others.

2.3 Obligations of the Customer

2.3.1 The Customer shall be responsible for:

A. the payment of all applicable charges pursuant to this tariff;

B. reimbursing the Company for damage to, or loss of, the Company's facilities or equipment caused by the acts or omissions of the Customer; or the noncompliance by the Customer with these regulations; or by fire or theft or other casualty on the Customer Premises; unless caused by the negligence or willful misconduct of the employees or agents of the Company. The Company will, upon reimbursement for damages to its facilities or equipment, cooperate with the Customer in prosecuting a claim against the person causing such damage, and the Customer shall be subjugated in the Company's right of recovery of damages to the extent of such payment;

C. providing at no charge, as specified from time to time by the Company, any needed personnel, equipment, space, and power to operate the Company facilities and equipment installed on the Customer Premises, and the level of heating and air conditioning necessary to maintain the proper operating environment on such Premises;

RECEIVED
OCT 13 2009
NPSC-Comm. Dept.

SECTION 2- RULES AND REGULATIONS (Cont'd.)

2.3 Obligations of the Customer (Cont'd.)

2.3.1 The Customer shall be responsible for: (Cont'd.)

D. obtaining, maintaining, and otherwise having full responsibility for all rights-of-way and conduit necessary for installation of fiber optic cable and associated equipment used to provide Access Services to the Customer from the cable building entrance or property line to the location of the equipment space described in Section C above. Any costs associated with obtaining and maintaining the rights-of-way described herein, including the costs of altering the structure to permit installation of the Company-provided facilities, shall be borne entirely by, or may be charged by the Company to, the Customer. The Company may require the Customer to demonstrate its compliance with this subsection prior to accepting an order for service;

E. providing a safe place to work and complying with all laws and regulations regarding the working conditions on the Premises at which the Company employees and agents shall be installing or maintaining the Company's facilities and equipment. The Customer may be required to install and maintain the Company facilities and equipment within a hazardous area if, in the Company's opinion, injury or damage to the Company employees or property might result from installation or maintenance by the Company. The Customer shall be responsible for identifying, monitoring, removing, and disposing of any hazardous material (e.g. friable asbestos) prior to any construction or installation work;

F. complying with all laws and regulations applicable to, and obtaining all consents, approvals, licenses, and permits as may be required with respect to, the location of the Company facilities and equipment in any Customer Premises or the rights-of-way which Customer is responsible for obtaining under Section D above; and granting or obtaining permission for the Company agents or employees to enter the Customer Premises at any time for the purpose of installing, inspecting, maintaining, repairing or, upon termination of service as stated herein, removing the facilities or equipment of the Company; and

G. not creating or allowing to be placed or maintained any liens or other encumbrances on the Company's equipment or facilities.

RECEIVED
OCT 13 2009
NPSC-Comm. Dept.

SECTION 2- RULES AND REGULATIONS, (Cont'd.)

2.3 Obligations of the Customer (Cont'd.)

2.3.2 Claims

With respect to any service or facility provided by the Company, Customer shall indemnify, defend and hold harmless the Company from all claims, actions, damages, liabilities, costs, and expenses, including reasonable attorneys' fees for:

A. any loss, destruction or damage to property of the Company or any third party, or the death of or injury to persons, including, but not limited to employees or invitees of either the Company or the Customer, to the extent caused by or resulting from the negligent or intentional act or omission of the Customer, its employees, agents, representatives or invitees;

B. any claim, loss, damage, expense or liability for infringement of any copyright, patent, trade secret, or any proprietary or intellectual property right of any third party, arising from any act or omission by the Customer, including, without limitation, use of the Company's services and facilities in a manner not contemplated by the agreement between the Customer and the Company.

2.3.3 Jurisdictional Reporting

A. The jurisdictional reporting requirements will be as specified below. When a Customer orders Access Service, its projected Percent Interstate Usage (PIU) may be provided in whole numbers to the Company. These whole-number percentages will be used by the Company to apportion the use and/or charges between interstate and intrastate for the following quarter or until a revised report is received as set forth herein. Reported or default PIU factors are used where the call detail is insufficient to determine the appropriate jurisdiction of the traffic.

RECEIVED
OCT 13 2009
NPSC-Comm. Dept.

SECTION 2- RULES AND REGULATIONS (Cont'd.)

2.3 Obligations of the Customer (Cont'd.)

2.3.3 Jurisdictional Reporting (Cont'd.)

B. Originating and Terminating Access: For Feature Group D Switched Access Service(s), the Customer may provide the Company with a projected PIU factor by supplying the Company with an interstate percentage of terminating access minutes on a quarterly basis, as described in Section D below.

If no projected PIU factor is submitted by the Customer, then the projected PIU will be set on a default basis of 50 percent interstate traffic and 50 percent intrastate traffic.

C. Except where the Company-measured access minutes are used as set forth above, the Customer-reported Projected PIU factor as set forth above will be used until the next quarter or until the Customer reports a different projected PIU factor, as set forth below. Any revised report will serve as the basis for future billing and will be effective the following calendar quarter.

D. Effective on the first of January, April, July and October of each year the Customer should update its interstate and intrastate jurisdictional report. The Customer should forward to the Company, to be received no later than 15 days after the first of each such month, a revised report showing the interstate and intrastate percentage of use for the past three months ending the last day of December, March, June, and September, respectively, for each service arranged for interstate use, based solely on the traffic originating from or terminating to the Company Local Switching Center. The revised report will serve as the basis for the next three months' billing and will be effective on the bill date for that service.

RECEIVED
OCT 13 2009
NPSC-Comm. Dept.

SECTION 2 - RULES AND REGULATIONS, (CONT'D.)

2.3 Obligations of the Customer (Cont'd.)

2.3.3 Jurisdictional Reporting (Cont'd.)

E. Jurisdictional Reports Verification:

If a billing dispute arises or a regulatory commission questions the projected PIU factor, the Customer will provide the data used to determine the projected PIU factor. The Customer will supply the data within 30 days of the Company's request. The Customer shall keep records of call detail from which the percentage of interstate and intrastate use can be ascertained and, upon request of the Company, shall make the records available for inspection as reasonably necessary for purposes of verification of the percentages. The Company reserves the right to conduct an audit at any time during the year. The Customer, as its own expense, has the right to retain an independent auditing firm.

F. Terminating Traffic from Exchange Carrier. Any exchange, intraLATA or interLATA traffic terminated to the Company's network by an Exchange Carrier that is subject to this Tariff shall be treated as Feature Group D traffic.

2.3.4 Identification and Rating of VoIP-PSTN Access Traffic **(M)(N)**

A. Scope

VoIP-PSTN Traffic is the traffic exchanged in time division multiplexing ("TDM") format that originates and/or terminates in Internet protocol ("IP") format. This section governs the identification of VoIP-PSTN Traffic that is required to be compensated at interstate access rates (unless the parties have agreed otherwise) by the Federal Communications Commission in its Report and Order in WC Docket Nos. 10-90 et. al., FCC No. 11-161 (November 18, 2011) ("FCC Order"). Specifically, this section establishes the method of separating such traffic (referred to in this tariff as "VoIP-PSTN Access Traffic") from the Customer's traditional intrastate access traffic, so that such VoIP-PSTN Access Traffic can be billed in accordance with the FCC Order.

(M)(N)

Material previously located on this page has been moved to Page 26.4.

RECEIVED
FEB - 1 2012
NPSC-Comm. Dept.

SECTION 2 - RULES AND REGULATIONS, (CONT'D.)

2.3 Obligations of the Customer (Cont'd.)

2.3.4 Identification and Rating of VoIP-PSTN Access Traffic, (Cont'd.) (N)

B. Rating of VoIP-PSTN Access Traffic

The VoIP-PSTN Access Traffic identified in accordance with this tariff section will be billed in accordance with the Company's applicable interstate switched access Tariff FCC No. 1.

C. Calculation and Application of Percent-VoIP-PSTN Usage Factor

The Company will determine the number of VoIP-PSTN Access Traffic minutes of use ("MOU") to which interstate rates will be applied under subsection (B), above, by applying a Percent VoIP Usage ("PVU") factor to the total intrastate access MOU (however determined – either based on call detail information or PIU) exchanged between the Company and the Customer. The PVU will be derived and applied as follows:

1. The Customer will calculate and furnish to the Company a factor (the "PVU-A") representing the whole number percentage of the total access MOU that the Customer exchanges with the Company in the State, that (a) is sent to the Company and that originates in IP format; or (b) is received from the Company and terminates in IP format. This PVU-A shall be based on information such as the number of the Customer's retail VoIP subscriptions in the state (e.g., as reported on FCC Form 477), traffic studies, actual call detail, or other relevant and verifiable information.

2. Company will, likewise, calculate a factor (the "PVU-B") representing the percentage of the Company's total access MOU in the State that the Company originates or terminates in IP format. This PVU-B shall be based on information such as the number of the Company's retail VoIP subscriptions in the state (e.g., as reported on FCC Form 477), traffic studies, actual call detail, or other relevant and verifiable information.

(N)

RECEIVED
FEB - 1 2012
NPSC-Comm. Dept.

SECTION 2 - RULES AND REGULATIONS, (CONT'D.)

2.3 Obligations of the Customer (Cont'd.)

2.3.4 Identification and Rating of VoIP-PSTN Access Traffic, (Cont'd.) **(N)**

C. Calculation and Application of Percent-VoIP-PSTN Usage Factor, (Cont'd.)

3. The Company will use the PVU-A and PVU-B factors to calculate an effective PVU factor that represents the percentage of total access MOU exchanged between the Company and the Customer that is originated or/or terminated in IP format, whether at the Company's end, at the Customer's end, or at both ends. The effective PVU factor will be calculated as the sum of: (A) the PVU-A factor and (B) the PVU-B factor times (1.0 minus the PVU-A factor).

4. The Company will apply the effective PVU factor to the total intrastate access MOU exchanged with the Customer to determine the number of VoIP-PSTN Access Traffic MOUs.

Example 1: The PVU-A is 40% and the PVU-B is 10%. The effective PVU factor is equal to 40% + (10% x 60%) = 46%. The Company will bill 46% of the Customer's intrastate access MOU in accordance with the Company's applicable interstate switched access tariff.

Example 2: The PVU-A is 0% and the PVU-B is 10%. The effective PVU factor is 0% + (10% x 100%) = 10%. The Company will bill 10% of the Customer's intrastate access MOU in accordance with the Company's applicable interstate switched access tariff.

Example 3: The PVU-B is 100%. No matter what the PVU-A factor is, the effective PVU is 100%. The Company will bill 100% of the Customer's intrastate access MOU in accordance with the Company's applicable interstate switched access tariff.

5. If the Customer does not furnish the Company with a PVU-A pursuant to the preceding paragraph 1, the Company will utilize an effective PVU equal to the PVU-B.

6. The Customer shall not modify their reported PIU factor to account for VoIP-PSTN Traffic. **(N)**

RECEIVED
FEB - 1 2012
NPSC-Comm. Dept.

SECTION 2 - RULES AND REGULATIONS, (CONT'D.)

2.3 Obligations of the Customer (Cont'd.)

2.3.4 Identification and Rating of VoIP-PSTN Traffic, (Cont'd.) **(N)**

D. Initial PVU Factor

If the PVU factor is not available and/or cannot be implemented in the Company's billing systems by December 29, 2011, once the factor is available and can be implemented the Company will adjust the Customer's bills to reflect the PVU retroactively to December 29, 2011. In calculating the initial effective PVU, the Company will take the Customer-specified PVU-A into account retroactively to December 29, 2011, provided that the Customer provides the factor to the Company no later than April 15, 2012; otherwise, it will set the initial effective PVU equal to the PVU-B, as specified in subsection (C)(5), above.

E. PVU Factor Updates

The Customer may update the PVU-A factor or the Company may update the PVU-B quarterly using the method set forth in subsection C.1 or C.2, respectively, above. If the Customer chooses to submit such updates, it shall forward to the Company, no later than 15 days after the first day of January, April, July and/or October of each year, a revised PVU-A factor based on data for the prior three months, ending the last day of December, March, June and September, respectively. The Company will use the revised PVU-A to calculate a revised effective PVU. The revised effective PVU factor will apply prospectively and serve as the basis for billing until superseded by a new effective PVU.

F. PVU Factor Verification

Not more than twice in any year, the Company may ask the Customer to verify the PVU-A factor furnished to the Company and Customer may ask the Company to verify the PVU-B factor and the calculation of the effective PVU factor. The party so requested shall comply, and shall reasonably provide the records and other information used to determine the respective PVU-A and PVU-B factors. The Customer shall retain the call detail, work papers, and/or other information used to develop the PVU factor for a minimum of one year. No prorating or back billing will be done based on updated PVU factors. **(N)**

RECEIVED
FEB - 1 2012
NPSC-Comm. Dept.

2.4 Customer Equipment and Channels (M)

2.4.1 General

A Customer may transmit or receive information or signals via the facilities of the Company. (M)

Material located on this page was previously located on Page 26.

RECEIVED
FEB - 1 2012
NPSC-Comm. Dept.

SECTION 2- RULES AND REGULATIONS, (Cont'd.)

2.4 Customer Equipment and Channels (Cont'd.)

2.4.2 Station Equipment

A. The Customer is responsible for providing and maintaining any terminal equipment on the Customer Premises. The electric power consumed by such equipment shall be provided by, and maintained at the expense of, the Customer. All such terminal equipment must be registered with the FCC under 47 C.F.R., Part 68, and all wiring must be installed and maintained in compliance with those regulations. The Company will, where practicable, notify the Customer that temporary discontinuance of the use of a service may be required; however, where prior notice is not practicable, nothing contained herein shall be deemed to impair the Company's right to discontinue forthwith the use of a service temporarily if such action is reasonable under the circumstances. In case of such temporary discontinuance, the Customer will be promptly notified and afforded the opportunity to correct the condition that gave rise to the temporary discontinuance. During such period of temporary discontinuance, credit allowance for service interruptions as set forth in Section 2.6 following is not applicable.

B. The Customer is responsible for ensuring that Customer-provided equipment connected to the Company equipment and facilities is compatible with such equipment and facilities. The magnitude and character of the voltages and currents impressed on the Company-provided equipment and wiring by the connection, operation, or maintenance of such equipment and wiring shall be such as not to cause damage to the Company-provided equipment and wiring or injury to the Company's employees or other persons. Any additional protective equipment required to prevent such damage or injury shall be provided by the Company at the Customer's expense.

RECEIVED
OCT 13 2009
NPSC-Comm. Dept.

SECTION 2- RULES AND REGULATIONS, (Cont'd.)

2.4 Customer Equipment and Channels (Cont'd.)

2.4.3 Interconnection of Facilities

A. Any special interface equipment necessary to achieve compatibility between the facilities and equipment of the Company used for furnishing Access Services and the Channels, facilities, or equipment of others shall be provided at the Customer's expense.

B. Access Services may be connected to the services or facilities of other communications carriers only when authorized by, and in accordance with, the terms and conditions of the tariffs of the other communications carriers that are applicable to such connections.

2.4.4 Inspections

A. Upon reasonable notification of the Customer, and at reasonable times, the Company may make such tests and inspections as may be necessary to determine that the Customer is complying with the requirements set forth in Section 2.4.2.B for the installation, operation, and wiring in the connection of Customer-provided facilities and equipment to the Company-owned facilities and equipment. No credit will be allowed for any interruptions occurring during such inspections.

B. If compatibility requirements for Customer-provided equipment are not being complied with, the Company may take such action as it deems necessary to protect its facilities, equipment, and personnel. The Company will notify the Customer promptly if there is any need for further corrective action. Within ten days of receiving this notice, the Customer must take this corrective action and notify the Company of the action taken. If the Customer fails to do this, the Company may take whatever additional action is deemed necessary, including the suspension of service, to protect its facilities, equipment, and personnel from harm. The Company will, upon request 24 hours in advance, provide the Customer with a statement of technical parameters that the Customer's equipment must meet.

RECEIVED
OCT 13 2009
NPSC-Comm. Dept.

SECTION 2- RULES AND REGULATIONS, (Cont'd.)

2.5 Payment Arrangements

2.5.1 Payment for Service

The Customer is responsible for payment of all charges for services and facilities furnished by the Company to the Customer or its Joint or Authorized Users.

A. The Customer is responsible for the payment of any sales, use, gross receipts, excise, access or other local, state and federal taxes, charges or surcharges (however designated) excluding taxes on the Company's net income imposed on or based upon the provision, sale or use of Access Services. All such taxes shall be separately designated on the Company's invoices. Any taxes, fees or surcharges imposed by a local jurisdiction (e.g. county and municipal taxes) will be recovered only from those Customers located in the affected jurisdictions. If an entity other than the Company (e.g. another carrier or a supplier) imposes charges on the Company, in addition to its own internal costs, in connection with a service for which the Company's Non-Recurring Charge is specified, those charges will be passed on to the Customer. It shall be the responsibility of the Customer to pay any such taxes that subsequently become applicable retroactively.

B. A surcharge is imposed on all charges for service(s) provided at addresses in any governmental, municipal or special taxing jurisdiction which levies, or asserts a claim of right to levy, a gross receipts tax on the Company's operations or a tax on interstate access charges incurred by the Company for originating access to telephone exchanges in that governmental, municipal or special taxing jurisdiction(s). This surcharge is based on the particular jurisdiction's receipts tax and other taxes imposed directly or indirectly upon the Company by virtue of, and measured by, the gross receipts or revenues of the Company and/or payment of interstate access charges. The surcharge will be shown as a separate line item on the Customer's monthly invoice.

RECEIVED
OCT 13 2009
NPSC-Comm. Dept.

SECTION 2- RULES AND REGULATIONS (Cont'd.)

2.5 Payment Arrangements (Cont'd.)

2.5.2 Billing and Collection of Charges

A. The Company shall bill on a current basis all charges incurred by, and credits due to, the Customer under this tariff attributable to services established, provided, or discontinued during the preceding billing period.

Non-Recurring Charges are due and payable within 20 days after the invoice date.

Amounts not paid by the due date will be considered past due. The Company will assess a late payment charge equal to 1.5% per month for any past due balance. If the Company becomes concerned at any time about the ability of a Customer to pay its bills, the Company may require that the Customer pay its bills within a specified number of days and make such payments in cash or the equivalent of cash.

If a service is disconnected by the Company in accordance with Section 2.5.3 following and later restored, restoration of service will be subject to all applicable installation charges.

The Customer shall notify the Company of any disputed items on an invoice within 90 days of the date of the invoice. If the Customer and the Company are unable to resolve the dispute to their mutual satisfaction, the Customer may file a complaint with the Commission in accordance with the Commission's rules and procedures.

RECEIVED
OCT 13 2009
NPSC-Comm. Dept.

SECTION 2- RULES AND REGULATIONS (Cont'd.)

2.5 Payment Arrangements (Cont'd.)

2.5.3 Deposits

A. Before the service or facility is furnished to a Customer whose credit has not been established under the Company policies, the Company may require a Customer to make a deposit to be held as a guarantee for the payment of charges. A deposit does not relieve the Customer of the responsibility for the prompt payment of bills on presentation. The deposit will not exceed an amount equal to:

1. an amount in excess of one-fourth of the estimated charge for the service for the ensuing twelve (12) months; or

2. one half (½) of the estimated charge for the minimum payment for a service or facility which has a minimum payment period of more than one (1) month; except that the deposit may include an additional amount in the event that a termination charge is applicable. In addition, the Company shall be entitled to require such an applicant or Customer to pay all its bills within a specified period of time, and to make such payments in cash or the equivalent of cash. At the Company's option, such deposit may be refunded to the Customer's account at any time. Also, the Company reserves the right to cease accepting and processing Service Orders after it has requested a security deposit and prior to the Customer's compliance with this request.

B. A deposit may be required in addition to an advance payment.
C. The Company shall pay interest on a deposit at a rate not to exceed six (6) percent. Interest on a deposit shall accrue at the rate prescribed by the Commission and, if requested, shall be credited annually to the customer by deducting an amount equal to such interest due from the amount of the customer's bill for service following the accrual date.
D. The charges set forth in this Tariff for facility terminations contemplate installations made during regular business hours in normal locations and under normal working conditions. Any installations to be made under other circumstances are subject to additional charges.
E. When a service or facility is discontinued, the amount of a deposit, if any, will be applied to the Customer's account and any credit balance remaining will be refunded. Before the service or facility is discontinued, the Company may, at its option return the deposit or credit the Customer's account.

RECEIVED
OCT 13 2009
NPSC-Comm. Dept.

SECTION 2- RULES AND REGULATIONS (Cont'd.)

2.5.4 Refusal and Discontinuance of Service

A. Upon nonpayment of any amounts owing to the Company, the Company may, after giving written notice to the Customer, discontinue or suspend service without incurring any liability.
B. Upon violation of any of the other material terms or conditions for furnishing service the Company may, by giving prior notice in writing to the Customer, discontinue or suspend service without incurring any liability if such violation continues during that period.
C. Upon condemnation of any material portion of the facilities used by the Company to provide service to a Customer or if a casualty renders all or any material portion of such facilities inoperable beyond feasible repair, the Company, by notice to the Customer, may discontinue or suspend service without incurring any liability.
D. Upon any governmental prohibition, or required alteration of the services to be provided or any violation of an applicable law or regulation, the Company may immediately discontinue service without incurring any Liability.
E. Upon the Company's discontinuance of service to the Customer under Section 2.5.4.A or 2.5.4.B above, the Company, in addition to all other remedies that may be available to the Company at law or in equity or under any other provision of this tariff, may declare all future monthly and other charges which would have been payable by the Customer during the remainder of the term for which such services would have otherwise been provided to the Customer to be immediately due and payable.

RECEIVED
OCT 13 2009
NPSC-Comm. Dept.

SECTION 2- RULES AND REGULATIONS (Cont'd.)

2.5 Payment Arrangements (Cont'd.)

2.5.4 Refusal and Discontinuance of Service (Cont'd.)

F. The Company may discontinue the furnishing of any and/or all service(s) to Customer, without incurring any liability:

1. Immediately and without notice if the Company deems that such action is necessary to prevent or to protect against fraud or to otherwise protect its personnel, agents, facilities or services. The Company may discontinue service pursuant to this sub-section if

(a) the Customer refuses to furnish information to the Company regarding the Customer's credit-worthiness, its past or current use of Common Carrier communications services or its planned use of service(s); or

(b) the Customer provides false information to the Company regarding the Customer's identity, address, creditworthiness, past or current use of Common Carrier communications services, or its planned use of the Company's service(s); or

(c) the Customer states that it will not comply with a request of the Company for security for the payment for service(s) in accordance with 2.5.3 above; or

(d) the Customer has been given written notice by the Company of any past due amount (which remains unpaid in whole or in part) for any of the Company's other Common Carrier communications services to which the Customer either subscribes or had subscribed or used; or

RECEIVED
OCT 13 2009
NPSC-Comm. Dept.

SECTION 2 - RULES AND REGULATIONS, (CONT'D.)

2.5 Payment Arrangements (Cont'd.)

2.5.4 Refusal and Discontinuance of Service (Cont'd.)

F. (Cont'd.)

1. (Cont'd.)

(e) The Customer uses service to transmit a message, locate a person or otherwise give or obtain information without payment for service; or

(f) The Customer uses, or attempts or use, service with the intent to avoid the payment, either in whole or in part, of the tariff charges for the service by:

I. Using or attempting to use service by rearranging, tampering with, or making connections to the Company's service not authorized by this tariff, or

II. Using tricks, schemes, false or invalid numbers, false credit devices, electronic devices; or

III. delivering calls to or accepting calls from the Company's End Users or other users of the Company's services; or **(T)**

IV. continuing to have the Company End Users or other users of the Company's services presubscribed to the Customer; or **(T)**

V. any other Fraudulent means or devices; or

2. Upon failure to receive payment within five (5) days of the payment due date; or

3. Five (5) days after sending the Customer written notice of noncompliance with any provision of this tariff if the noncompliance is not corrected within that five (5)-day period. The discontinuance of service(s) by the Company pursuant to this Section does not relieve the Customer of any obligation to pay the Company for charges due and owing for service(s) furnished up to the time of discontinuance.

RECEIVED
SEP 13 2010
NPSC-Comm. Dept.

By: Jonathan S. Mitchell, CEO
4001 Weston Parkway
Cary, NC 27513

SECTION 2- RULES AND REGULATIONS (Cont'd.)

2.5 Payment Arrangements (Cont'd.)

2.5.4 Refusal and Discontinuance of Service (cont'd.)

G. In the event the Company incurs fees or expenses, including attorney's fees, in collecting, or attempting to collect, any charges owed the Company; the Customer will be liable to the Company for the payment of all such fees and expenses reasonably incurred.

2.5.5 Cancellation of Application for Service

Where, prior to cancellation by the Customer, the Company incurs any expenses in installing the service or in preparing to install the service that it otherwise would not have incurred, a charge equal to the costs the Company incurred, less net salvage, shall apply, but in no case shall this charge exceed the sum of the charge for the minimum period of services ordered, including installation charges, and all charges others levy against the company that would have been chargeable to the Customer had service begun.

The special charges described will be calculated and applied on a case-by-case basis.

RECEIVED
OCT 13 2009
NPSC-Comm. Dept.

SECTION 2- RULES AND REGULATIONS (Cont'd.)

2.6 Allowances for Interruptions in Service

Interruptions in service that are not due to the negligence of or noncompliance with the provisions of this Tariff by the Customer or the operation or malfunction of the facilities, power, or equipment provided by the Customer, will be credited to the Customer as set forth in Section 2.6.1 for the part of the service that the interruption affects.

2.6.1 Credit for Interruptions

A. A credit allowance will be made at the request of the customer when an interruption occurs of a failure of any component furnished by the Company under this Tariff. An interruption period begins when the Customer reports a service, facility or circuit, to be interrupted and releases it for testing and repair. An interruption period ends when the service, facility, or circuit is operative. If the Customer reports a service, facility or circuit to be inoperative but declines to release it for testing and repair, it is considered to be impaired, but not interrupted.

B. For calculating credit allowances, every month is considered to have thirty (30) days. A credit allowance is applied on a pro-rata basis against the rates specified hereunder and is dependent upon the length of the interruption. Only those facilities on the interrupted portion of the circuit will receive a credit.

No credit will be allowed for an interruption of a Dedicated Access facility for less than twenty four (24) hours. After the first twenty four (24) hour period, a credit equal to 1/30 of the Dedicated Access facility charges will be applied to each interruption which is in excess of twelve (12) hours and up to twenty four (24) hours.

RECEIVED
OCT 13 2009
NPSC-Comm. Dept.

SECTION 2- RULES AND REGULATIONS (Cont'd.)

2.6 Allowances for Interruptions in Service, (Cont'd.)

2.6.2 Limitations on Allowances

No credit allowance will be made for:

A. interruptions due to the negligence of, or noncompliance with the provisions of this tariff by, the Customer, Authorized User, Joint-User, or other Common Carrier providing service connected to the service of the Company;

B. interruptions due to the negligence of any person other than the Company, including, but not limited to, the Customer or other Common Carriers connected to the Company's facilities;

C. interruptions due to the failure or malfunction of non-Company equipment;

D. interruptions of service during any period in which the Company is not given full and free access to its facilities and equipment for the purpose of investigating and correcting interruptions;

E. interruptions of service during a period in which the Customer continues to use the service on an impaired basis;

F. interruptions of service during any period when the Customer has released service to the Company for maintenance purposes or for implementation of a Customer order for a change in service arrangements;

G interruption of service due to circumstances or causes beyond the control of the Company.

2.6.3 Use of Alternative Service Provided During Interruption of Service

Should the Customer elect to use an alternative service provided by the Company, or another Provider, during the period that a service is interrupted, the Customer must pay the tariffed rates and charges for the alternative service used.

RECEIVED
OCT 13 2009
NPSC-Comm. Dept.

SECTION 2- RULES AND REGULATIONS (Cont'd.)

2.7 Cancellation of Service

If a Customer cancels services before the completion of the term for any reason whatsoever without notice and without the Company's concurrence or consent, the Customer agrees to pay to the Company the following sums which shall become due and owing as of the effective date of the cancellation or termination and shall be payable within the period set forth herein: all costs, fees, and expenses reasonably incurred in connection with 1) all Non-Recurring Charges reasonably expended by the Company to establish service to Customer; plus 2) any disconnection, early cancellation or termination charges reasonably incurred and paid to third parties by the Company on behalf of Customer, plus 3) all Recurring Charges specified in the applicable Tariff for the balance of the then current term.

2.8 Transfers and Assignments

Neither the Company nor the Customer may assign or transfer its rights or duties in connection with the services and facilities provided by the Company without the written consent of the other party, except that the Company may assign its rights and duties (a) to any subsidiary, parent company or affiliate of the Company (b) pursuant to any sale or transfer of substantially all the assets of the Company; or pursuant to any financing, merger or reorganization of the Company.

RECEIVED
OCT 13 2009
NPSC-Comm. Dept.

SECTION 2- RULES AND REGULATIONS (Cont'd.)

2.9 Notices and Communications

2.9.1 Delivery of calls to or acceptance of calls from the Company's End User locations over the Company-switched local exchange services constitutes an order by the Customer to purchase switched access services as described herein. Similarly the selection by the Company's End User of the Customer as the presubscribed IXC constitutes an order of switched access by the Customer. In these cases, an invoice will be the first communication from the Company to the Customer. In other instances a Service Order may be used.

2.9.2 The Customer shall designate on the Service Order an address to which the Company shall mail or deliver all notices and other communications, except that the Customer may also designate a separate address to which the Company's bills for service shall be mailed.

2.9.3 The Company shall designate on the Service Order an address to which the Customer shall mail or deliver all notices and other communications, except that the Company may designate a separate address, on each bill for service, to which the Customer shall mail payment on that bill

2.9.4 All notices or other communications required to be given pursuant to this tariff shall be in writing. Notices and other communications of either party, and all bills mailed by the Company, shall be presumed to have been delivered to the other party on the third business day following deposit of the notice, communication, or bill with the U.S. Mail or a private delivery service, prepaid and properly addressed, or when actually received or refused by the addressee, whichever occurs first.

2.9.5 The Company or the Customer shall advise the other party of any changes to the addresses designated for notices, other communications or billing, by following the procedures for giving notice set forth herein.

RECEIVED
OCT 13 2009
NPSC-Comm. Dept.

SECTION 3- ORDERING OPTIONS FOR ACCESS SERVICE

3.1 General

This section sets forth the regulations and order related charges for Access Service Requests (ASR) for Switched Access Service, as defined in this tariff. These charges are in addition to other applicable charges set forth in other sections of this tariff.

3.1.1 Ordering Conditions

Customer may order switched access through a Constructive Order, as defined herein, or through an ASR. The format and terms of the ASR will be as specified in the Industry Access Service Order Guidelines, unless otherwise specified herein.

3.1.2 Minimum Period of Service

The minimum period for which Access Service is provided and for which charges are applicable is one month.

A. The following changes will be treated as a discontinuance of the existing service and a request for installation of a new service. All associated Non-Recurring Charges will apply for the new service, and a new minimum period will be established:

1. a change in the identity of the Customer of record; or
2. a move by the Customer to a different building.

B. When Access Service is disconnected prior to the expiration of the minimum period, charges are applicable for the balance of the minimum period. The Minimum Period Charge for monthly billed services will be determined as follows:

For Switched Access Service, the charge for a month or fraction thereof is equivalent to 50,000 billed minutes of use for the applicable service.

All applicable Non-Recurring Charges for the service will be billed in addition to the Minimum Period Charge.

RECEIVED
OCT 13 2009
NPSC Comm. Dept.

SECTION 3 - ORDERING OPTIONS FOR ACCESS SERVICE, (CONT'D.)

3.2 Ordering, Rating and Billing of Access Services Where More Than One Exchange Telephone Company is Involved **(N)(M)**

3.2.1 The billing method set forth herein is applicable to interconnection arrangements between Exchange Telephone Companies involved in the provision of all Access Services. In accordance with the Federal Communications Commission's Memorandum Opinion and Order in CC Docket No. 86-106, adopted July 20, 1987, the Company will adhere to the standards set forth in the Multiple Exchange Carrier Access Billing (MECAB) and the Multiple Exchange Carrier Ordering and Design (MECOD) Guidelines when providing access service under Multiple Telephone Company (Interconnection Point) Billing arrangements. The Exchange Telephone Companies involved in providing the Access Service will develop a mutually agreeable working arrangement to allow one of the Exchange Telephone Companies to perform "Access Service Coordination" (ASC) for all services requested. **(N)(M)**

Certain material previously found on this sheet is now located on Sheet 47.1.

RECEIVED
SEP 13 2010
NPSC-Comm. Dept.

SECTION 3- ORDERING OPTIONS FOR ACCESS SERVICE (Cont'd.)

3.2 Ordering, Rating and Billing of Access Services Where More Than One Exchange Telephone Company is Involved, (Cont'd.) **(N)**

3.2.2 When an Access Service ordered by a Customer involves more than one Exchange Telephone Company, the Exchange Telephone Companies involved will use a Multiple Bill Method. Under the Multiple Bill Method each Exchange Telephone Company involved will provide the portion of the service in its operating territory and bill the Customer in accordance with its Access Service tariff.

A. When Switched Access Service is ordered by a Customer where one end of the Transport element is in the Company operating territory and the other end is in another Exchange Telephone Company operating territory, the orders shall be received as follows:

1. For Switched Access Service ordered to an end office, the Exchange Telephone Company in whose operating territory the end office is located must receive the Service Order from the Customer.

2. For Switched Access Service ordered to an access tandem, the Exchange Telephone Company in whose operating territory the access tandem is located must receive the Service Order from the Customer. A Service Order delivered to the Exchange Telephone Company operating an access tandem that is subtended by this Company's switch will constitute a Service Order for Switched Access Service under this tariff.

3. For the Service ordered set forth in 1. and 2. preceding, the Exchange Telephone Company in whose operating territory the customer point of termination is located must also receive a copy of the order from the customer.

4. Each Exchange Telephone Company will provide the portion of the Transport element in its operating territory to an interconnection point with another Exchange Telephone Company and will bill the charges in accordance with its Access Service tariff. All appropriate charges in each Exchange Telephone Company tariff are applicable.

B. The interconnection points will be determined by the Exchange Telephone Companies involved. **(N)**

RECEIVED
SEP 13 2010
NPSC-Comm. Dept.

SECTION 4 - SWITCHED ACCESS SERVICE

4.1 General

Switched Access Service involves the use of common terminating, switching and transport facilities. Switched Access Service provides the ability to originate or terminate calls between an End User's Premises, Conference Bridge or other user of the Company's services and a Customer's Premises.

Rates and charges are set forth in Section 5. The application of rates for Switched Access Service is described in Section 5.

4.1.1 The Company will assess and collect switched access rate elements under this tariff for access services, regardless of whether the Company itself delivers such traffic to the called party's premises or delivers the call to the called party's premises via contractual or other arrangements with an affiliated or unaffiliated provider of VoIP services that does not itself seek to collect switched access charges for the same traffic. The Company will not charge for functions not performed by the Company, its affiliated or unaffiliated provider of VoIP services. For purposes of this provision, functions provided by the Company as part of transmitting telecommunications between designated points using, in whole or in part, technology other than TDM transmission in a manner that is comparable to a service offered by a local exchange carrier constitutes the functional equivalent of carrier access service. **(N)** | | | | | | | | | **(N)**

4.2 Provision and Description of Switched Access Service Arrangements

4.2.1 Feature Group Access

Feature Group ("FG") Access provides trunk-side access to Local Switching Center switches, for the Customer's use in originating and terminating communications. Basic FG Access service will be provided with Multi-Frequency In-Band Signaling (SS7 is also available, where capabilities exist).

All traffic is routed to and from the Company's local switching center via the Customer's tandem provider or via end office trunking, where available.

4.2.2 Manner of Provision

Trunks used for Switched Access Service may be configured for one-way (either originating only or terminating only) or for two-way directionality.

RECEIVED
FEB - 1 2012
NPSC-Comm. Dept.

SECTION 4 - SWITCHED ACCESS SERVICE, (CONT'D.)

4.2 Provision and Description of Switched Access Service Arrangements (Cont'd.)

4.2.3 Call Types

The following Switched Access Service call types are available:

A. Originating FG Access
B. Originating 800 FG Access
C. Terminating FG Access

4.2.4 Originating FG Access

The access code for FG Access switching is a uniform access code of the form 1+ or 011+ or 101XXXX. For 101XXXX dialing a single access code will be the assigned number of all FG Access provided to the Customer by the Company. When the access code is used, FG Access switching also provides for dialing the digit 0 for access to the Customer's operator service, 911 for access to emergency service, and/or the end-of-dialing digit (#) for cut-through access to the Customer's premises. The Company will provide originating FG access consistent with dialing parity obligations.

4.2.5 Originating 800 FG Access

800 Data Base Access Service is a service utilizing originating Trunk side Switched Access Service. When an 8YY + NXX + XXXX call is originated by an End User or other users of the Company's services, the Company will perform Customer identification based on screening of the full ten digits of the 8YY number to determine the Customer location to which the call is to be routed. This Tariff applies only to intrastate 8YY calls originated by End Users and other users of the Company's services served by the Company in Nebraska. **(T)**

4.2.6 Terminating FG Access

FG Access, when used in the terminating direction, may be used to access end users who are subscribing to the Company's Local Exchange Services or other users of the Company's services. Calls in the terminating direction will not be completed to 950-OXXX or 950-lXXX access codes, local operator assistance (0- and 0+), Directory Assistance, (411 or 5551212) service codes 611 and 911 and 101XXXX access codes. **(T)** **(T)**

RECEIVED
SEP 13 2010
NPSC-Comm. Dept.

SECTION 5 - SWITCHED ACCESS RATES

5.1 General

This section contains the specific regulations governing the rates and charges that apply for Switched Access Services:

The Company offers Tandem Switching Access Service, Local Switching Access Service – Direct Connection, and Local Switching Access Service – Indirect Connection.

There are three types of rates and charges that apply to Switched Access Service:

Non-Recurring Charges:	One-time charges that apply for a specific work activity.
Recurring Charges:	Fixed charges apply each month and depend on the number and type of facilities in place.
Usage Charges:	Charges that are applied on a per access minute basis. Usage rates are accumulated over a monthly period.

5.2 Rate Categories

5.2.1 Tandem Switching Access Service (Originating and Terminating)

Tandem Switching is an access service providing transmission and tandem switching between the Customer designated premises and the Company switch(es) where the Customer's traffic is switched from or to an entity other than an End User for purposes of originating or terminating the Customer's communications. The Tandem Switching Access Service composite rate is comprised of the following rate elements: tandem switching charges, tandem termination charges, common multiplexing, and tandem facility mileage charges. **(T)**

5.2.2 Local Switching Access Service - Direct Connection (Originating and Terminating)

Local Switching Access Service - Direct Connection is an access service providing the Customer connections to and use of end office switching equipment for the origination or termination of the Customer's communications to the Company's End Users. The Local Switching Access Service - Direct Connection rate consists of end office switching charges and may also include a DS3 trunk port charge. With Direct Connection, Customer is responsible for ordering or providing the DS3 facility to the Company's point of presence in the access tandem serving area. The DS3 trunk port charge applies on an Individual Case Basis when the Customer is not collocated with the Company's switch. The rate will not exceed that of the competing ILEC rate for the same function.

RECEIVED
AUG 11 2014
NPSC-Comm. Dept.

SECTION 5 - SWITCHED ACCESS RATES, (CONT'D.)

5.2 Rate Categories (Cont'd.)

5.2.3 Local Switching Access Service - Indirect Connection (Originating and Terminating)

Local Switching Access Service - Indirect Connection is an access service providing the Customer use of and office switching equipment for the origination or termination of the Customer's communications to the Company's End Users as well as transport to or from the Customer's tandem provider. The Local Switching Access Service - Indirect Connection composite rate is comprised of the following rate elements: end office switching charges, common trunk port, tandem termination charges, common multiplexing, and tandem facility mileage charges. **(T)** **(T)**

5.2.4 Toll-Free 8YY Data Base Query

The Toll-Free 8YY Data Base Query Charge, will apply for each Toll-Free 8YY call query received at the Company's (or its provider's) Toll-Free 8YY database.

5.2.5 Toll-Free 8YY Switched Access Service

The Toll-Free 8YY Switched Access Service is an originating access service in which the Company delivers Toll Free calls to Customers. Rate elements apply as set forth in Section 5.4.5.

5.2.6 Optional Features

Other optional features may be available on an Individual Case Basis (ICB).

RECEIVED
AUG 11 2014
NPSC-Comm. Dept.

SECTION 5 - SWITCHED ACCESS RATES, (CONT'D.)

5.3 Billing of Access Minutes

When recording originating calls over FG Access with multi-frequency address signaling, usage measurement begins when the first wink supervisory signal is forwarded from the Customer's facilities. The measurement of originating call usage over FG Access ends when the originating FG Access entry switch receives disconnect supervision from either the originating End User's or other user's Local Switching Center - (indicating that the originating End User or other user has disconnected), or the Customer's facilities, whichever is recognized first by the entry switch. **(T)** **(T)**

For terminating calls over FG Access with multi-frequency address signaling, the measurement of access minutes begins when a seizure signal is received from the Carrier's trunk group at the Point of Presence within the LATA. The measurement of terminating call usage over FG Access ends when a disconnect signal is received, indicating that either the originating or terminating user has disconnected.

When recording originating calls over FG Access with SS7 signaling, usage measurement begins with the transmission of the initial address message by the switch for direct trunk groups and with the receipt of an exit message by the switch for tandem trunk groups. The measurement of originating FG Access usage ends when the entry switch receives or sends a release message, whichever occurs first.

For terminating calls over FG Access with SS7 signaling, the measurement of access minutes begins when the terminating recording switch receives the initial address message from the terminating End User or other user. On directly routed trunk groups or on tandem routed trunk groups, the Company switch receives the initial address message and sends the indication to the Customer in the form of an answer message. The measurement of terminating FG Access call usage ends when the entry switch receives or sends a release message, whichever occurs first. **(T)**

RECEIVED
SEP 13 2010
NPSC-Comm. Dept.

SECTION 5 - SWITCHED ACCESS RATES, (CONT'D.)

5.4 Rates and Charges

5.4.1 Tandem Switching Access Service (Composite Rate)

Originating	$0.0025220 per minute of use
Terminating	$0.0025220 per minute of use

The Composite rate is comprised of those rate elements specified in Section 5.2.1, and assume one (1) mile of tandem facility mileage.

5.4.2 Local Switching Access Service – Direct Connection (Originating and Terminating)

A. End Office Switching

Originating	$0.0019740 per minute of use	
Terminating	Note 1	(C)
B. DS3 Trunk Port:	ICB	

5.4.3 Local Switching Access Service – Indirect Connection (Composite Rate)

Originating	$0.0022440 per minute of use	
Terminating	Note 1	(C)

The Composite rate is comprised of those rate elements specified in Section 5.2.3, and assume one (1) mile of tandem facility mileage.

5.4.4 Toll-Free 8YY Data Base Query

Per Query	$0.0040530

5.4.5 Toll Free 8YY Switched Access Service

Originating from the Company's End Users: Local Switching Access Service – Direct Connection or – Indirect Connection rates will apply, as appropriate.

Originating from parties that are not the Company's End Users: Tandem Switching Service rate will apply.

5.4.6 Switched Access Optional Features

All Optional Features are offered on an Individual Case Basis (ICB).

Note 1: Rates mirror the rates set forth in the Company's Federal Access Tariff, FCC No. 1, posted at https://apps.fcc.gov/etfs/public/lecTariffs.action?idLec=365 (N)

RECEIVED
JUL - 6 2016
NPSC-Comm. Dept.

SECTION 5 - SWITCHED ACCESS RATES, (CONT'D.)

5.4 Rates and Charges, (Cont'd.)

5.4.7 Miscellaneous Charges (M)

Customer Requested Due Date Change [1,2]	$50, per order	
Customer Requested Expedite [2]	$250, per location, per order	
Cancellation (after 3 business days from order placement) [2]	Full NRCs + $250, per order	
Design Change, DS0/DS [1,2]	$150, per circuit	
Design Change, DS3 and higher [2]	$300, per circuit	
Administrative Processing [2]	$25, per order	(M)
Returned Check Charge	$30.00	(M)
Paper/Electronic Media Fee Customers who elect to receive a paper or CD-ROM version of their invoice will incur a surcharge	$15.00, per bill cycle	(M)

Material now found on this page was previously located on Pages 41 and 47.

1 Company Due Date Change Policy - No due date change accepted at or after four (4) days prior to the current due date. If a Customer request is received during that time period, the supplemental charge will apply and, in addition, the billing will start on the current due date without exception.

2 For services involving facilities leased from other telecommunications providers, Supplementary Charges will be priced on an Individual Case Basis, and will be based upon a pass-through of all charges assessed by other providers, plus the Company's administrative costs.

RECEIVED
SEP 13 2010
NPSC-Comm. Dept.

SECTION 6 - CONTRACTS AND INDIVIDUAL CASE BASIS ARRANGEMENTS

6.1 Contracts

The Company may provide any of the services offered under this tariff, or combinations of services, to Customers on a contractual basis. The terms and conditions of each contract offering are subject to the agreement of both the Customer and the Company. Such contract offerings will be made available to similarly situated Customers in substantially similar circumstances. Rates in other sections of this tariff do not apply to Customers who agree to contract arrangements, with respect to services within the scope of the contract.

Services provided under contract are not eligible for any promotional offerings that maybe offered by the Company from time to time.

6.2 Individual Case Basis Arrangements

Arrangements will be developed on an individual case basis (ICB) in response to a bona fide special request from a Customer or prospective Customer to develop a competitive bid for a service. ICB rates will be offered to the Customer in writing and on a non-discriminatory basis.

RECEIVED
OCT 13 2009
NPSC-Comm. Dept.

SECTION 7 – CALL FLOW DIAGRAMS (N)

Tandem Switching Access Service (Originating and Terminating)
Section 5.2.1 (Sections 5.2.4 and 5.2.5 apply to Originating 8YY Calls)

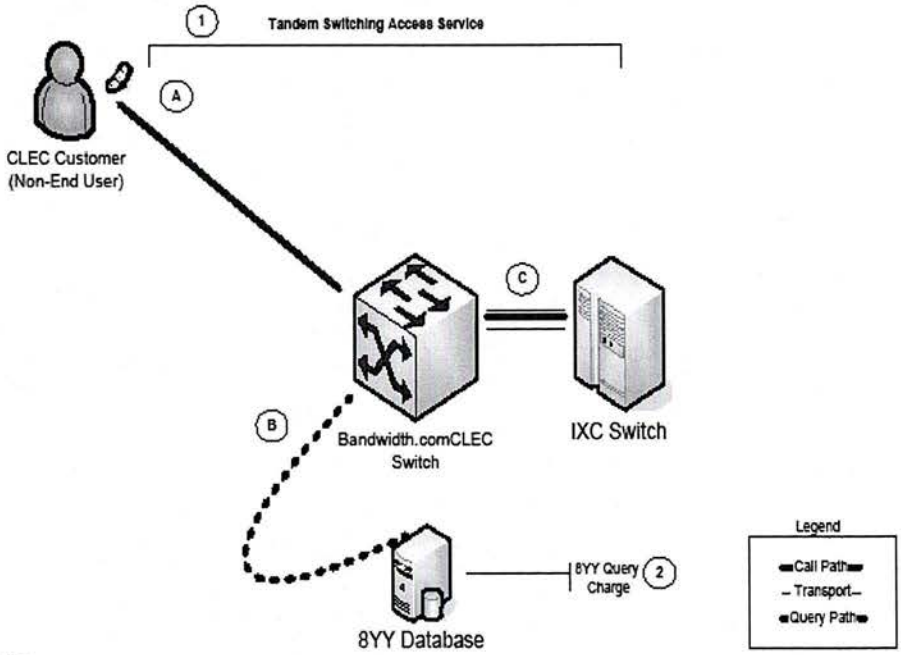

Originating Call Flow:
A. CLEC's Non-End User Customer delivers long distance call to CLEC switch
B. If 8YY call, CLEC Switch looks up IXC that should receive the call
C. Call is routed to IXC switch from CLEC switch

Originating Charges:
- CLEC charges IXC (1) Tandem Switching Access Service, which is comprised of a) tandem switching, b) tandem termination, and c) tandem facility mileage
8YY Query Charge, as applicable
- Additional charges may apply depending upon whether the IXC connects directly to the CLEC or if call must be routed through the ILEC Access Tandem to IXC

Terminating Call Flow:
C. IXC delivers terminating long distance call to CLEC switch
A. Call is routed to CLEC's Non-End User Customer

Terminating Charges:
- CLEC charges IXC for (1) Tandem Switching Access Service, which is comprised of a) tandem switching, b) tandem termination, and c) tandem facility mileage.
- Additional charges may apply depending upon whether the IXC connects directly to CLEC or if call must be routed through an ILEC Access Tandem to CLEC

Confidential

(N)

RECEIVED
SEP 13 2010
NPSC-Comm. Dept.

SECTION 7 – CALL FLOW DIAGRAMS, (CONT'D.) (N)

Local Switching Access Service – Direct Connection (Originating and Terminating)
Section 5.2.2 (Sections 5.2.4 and 5.2.5 apply to Originating 8YY Calls)

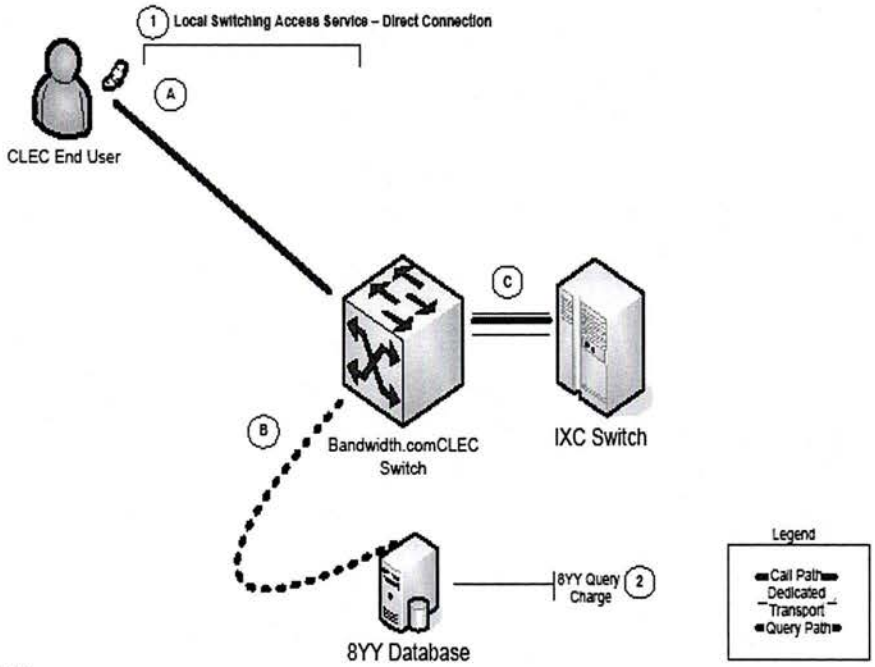

Originating Call Flow:
A. CLEC's End User places a long distance call that is routed to CLEC switch
B. If 8YY call, CLEC Switch looks up IXC that should receive the call
C. Call is routed to IXC over dedicated transport

Originating Charges:
- CLEC charges IXC (1) Local Switching Access Service, which is comprised of a) end office switching, and b) dedicated trunk port charge, where applicable; and (2) 8YY Query Charge, as applicable
- Customer is responsible for providing or ordering DS3 facility to CLEC's point of presence in the access tandem serving area

Terminating Call Flow:
C. IXC delivers terminating long distance call to CLEC over dedicated transport
A. Call is routed to CLEC's End User

Terminating Charges:
- CLEC charges IXC (1) Local Switching Access Service, which is comprised of a) end office switching, and b) dedicated trunk port charge, where applicable
- Customer is responsible for providing or ordering DS3 facility to CLEC's point of presence in the access tandem serving area

Confidential

(N)

RECEIVED
SEP 13 2010
NPSC-Comm. Dept.

SECTION 7 – CALL FLOW DIAGRAMS, (CONT'D.) (N)

Local Switching Access Service – Indirect Connection (Originating and Terminating)
Section 5.2.3 (Sections 5.2.4 and 5.2.5 apply to Originating 8YY Calls)

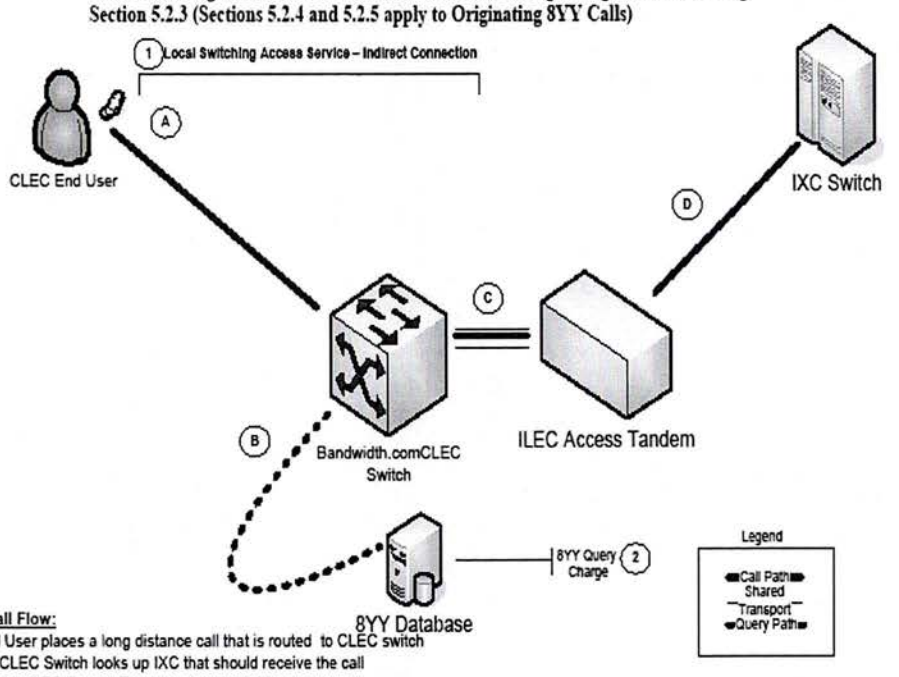

Originating Call Flow:
A. CLEC's End User places a long distance call that is routed to CLEC switch
B. If 8YY call, CLEC Switch looks up IXC that should receive the call
C. Call is routed to ILEC Access Tandem over shared transport
D. ILEC routes call to IXC

Originating Charges:
• CLEC charges IXC (1) Local Switching Access Service – Indirect Connection, which is comprised of a) end office switching, b) tandem termination, and c) tandem facility mileage, and (2) 8YY Query Charge, as applicable
• Additional charges may apply per ILEC tariff for functions performed by ILEC

Terminating Call Flow:
D. IXC delivers terminating long distance call to ILEC Access Tandem for routing to CLEC End User
C. ILEC Access Tandem routes call call over Shared Transport to CLEC switch
A. Call is routed to CLEC End User

Terminating Charges:
• CLEC charges IXC (1) Local Switching Access Service – Indirect Connection, which is comprised of a) end office switching, b) Tandem Termination, and c)tandem facility mileage
• Additional charges may apply per ILEC tariff for functions performed by ILEC

Confidential

(N)

RECEIVED
SEP 13 2010
NPSC-Comm. Dept.